20” TFT TV

SERVICE MANUAL

TABLE OF CONTENTS

1. INTRODUCTION 1
2. TUNER 1
3. IF PART (TDA988X) 1
4. MULTI STANDARD SOUND PROCESSOR 1
5. AUDIO AMPLIFIER STAGE WITH AN7522 2
6. POWER 2
7. MICROCONTROLLER SDA55XX 2
   7.1. General Features 2
   7.2. External Crystal and Programmable Clock Speed 2
   7.3. Microcontroller Features 2
   7.4. Memory 2
   7.5. Display Features 2
   7.6. ROM Characters 3
   7.7. Acquisition Features 3
   7.8. Ports 3
8. SERIAL ACCESS CMOS 16K (2048*8) EEPROM ST24C16 3
9. CLASS AB STEREO HEADPHONE DRIVER TDA1308 3
10. SAW FILTERS 3
11. IC DESCRIPTIONS AND INTERNAL BLOCK DIAGRAM 4
   11.1. LM1117 4
      11.1.1. General Description 4
      11.1.2. Features 4
      11.1.3. Applications 4
      11.1.4. Connection Diagrams 4
   11.2. LM2576 5
      11.2.1. General Description 5
      11.2.2. Features 5
      11.2.3. Pin description 5
   11.3. LM317T 6
      11.3.1. Description 6
      11.3.2. Features 6
   11.4. TFMS5360 6
      11.4.1. Description 6
      11.4.2. Features 6
   11.5. ST24LC21 7
      11.5.1. Description 7
      11.5.2. Features 7
      11.5.3. **Pin connections** 7
   11.6. SST37VF040 8
      11.6.1. Description 8
      11.6.2. Features 8
      11.6.3. Pin Description 8
   11.7. TEA5114A 9
      11.7.1. General description 9
      11.7.2. Features 9
      11.7.3. Pin Connections 9
   11.8. TEA6415 10
      11.8.1. General description 10
      11.8.2. 13.5.2.Features 10
      11.8.3. 13.5.3.Pinning 10
   11.9. VPC3230D 11
      11.9.1. General Description 11
      11.9.2. Pin Connections and Short Descriptions 11
   11.10. SDA55XX (SDA5550) 13
      11.10.1. General description 13
   11.11. TDA9885/86 14
      11.11.1. General description 14

11.11.2. Features 14
11.11.3. Pinning 14
11.12. TDA1308 15
11.12.1. General Description 15
11.12.2. Features 15
11.12.3. Pinning 15
11.13. AN7522N 15
11.13.1. General description 15
11.13.2. Pin Descriptions 15
11.14. PI5V330 16
11.14.1. General description 16
11.14.2. Features 16
11.14.3. Pin Descriptions 16
11.15. GM6015 17
11.15.1. General description 17
11.15.2. Features 17
11.16. SAA3010T 18
11.16.1. Description 18
11.16.2. Features 18
11.16.3. Pinning 18
11.17. AD9883A 19
11.17.1. General description 19
11.17.2. Features 19
11.17.3. Pin Descriptions 19
11.18. MC141585 22
11.18.1. General description 22
11.18.2. Features 22
11.18.3. Pin Description 22
11.19. MC34063 24
11.19.1. Description 24
11.19.2. Features 24
11.19.3. Pin connections 24
11.20. MSP34X0G 25
11.20.1. Introduction 25
11.20.2. Features 25
11.20.3. Pin connections 26
12. SERVICE MENU SETTINGS 28
12.1. ADJUST MENU SETTINGS 28
12.2. OPTIONS MENU SETTINGS 29
12.3. APS WSS TEST MENU 33
13. BLOCK DIAGRAM 34
14. CIRCUIT DIAGRAMS 38

1. INTRODUCTION

20" TFT-LCD TV is a **Progressive** TV control system based on the µ-controller **SDA555X,** with built-in **de-interlacer** and **scaler**.

TFT TV is a progressive scan flicker free colour television with PC input, driving an SVGA(800*600) panel with 4:3 aspect ratio. The chassis is capable of operation in PAL, SECAM, NTSC (playback) colour standards and multiple transmission standards as B/G, D/K, I/I', and L/L´. Sound system output is supplying 2x3W (10%THD) for left and right outputs of 16Ω speakers. The chassis is equipped with two full SCART's, one front-AV, one SVHS, one D-Sub 15 (PC) input, one PC stereo audio input and one line out (left and right) and one HP outputs.

2. TUNER

As the thickness of the TV set has a limit, a horizontal mounted tuner is used in the product, which is suitable for CCIR systems B/G, H, L, L´, I/I´, and D/K. The tuning is available through the digitally controlled I^2C bus (PLL). Below you will find info on the Tuner in use.

General description of UV1316:

The UV1316 tuner belongs to the UV 1300 family of tuners, which are designed to meet a wide range of applications. It is a combined VHF, UHF tuner suitable for CCIR systems B/G, H, L, L', I and I'. The low IF output impedance has been designed for direct drive of a wide variety of SAW filters with sufficient suppression of triple transient.

Features of UV1316:

1. Member of the UV1300 family small sized UHF/VHF tuners
2. Systems CCIR: B/G, H, L, L', I and I'; OIRT: D/K
3. Digitally controlled (PLL) tuning via I^2C-bus
4. Off-air channels, S-cable channels and Hyper band
5. Compact size
6. Complies to "CENELEC EN55020" and "EN55013"

Pinning:

1.	Gain control voltage (AGC)	:	4.0V, Max: 4.5V
2.	Tuning voltage		
3.	I²C-bus address select	:	Max: 5.5V
4.	I²C-bus serial clock	:	Min:-0.3V, Max: 5.5V
5.	I²C-bus serial data	:	Min:-0.3V, Max: 5.5V
6.	Not connected		
7.	PLL supply voltage	:	5.0V, Min: 4.75V, Max: 5.5V
8.	ADC input		
9.	Tuner supply voltage	:	33V, Min: 30V, Max: 35V
10.	Symmetrical IF output 1		
11.	Symmetrical IF output 2		

3. IF PART (TDA988X)

The TDA9885 is an alignment-free single standard (without positive modulation) vision and sound IF signal PLL.

The TDA9886 is an alignment-free multistandard (PAL, SECAM and NTSC) vision and sound IF signal PLL demodulator for positive and negative modulation including sound AM and FM processing.

Both devices can be used for TV, VTR, PC and set-top box applications.

4. MULTI STANDARD SOUND PROCESSOR

The MSP34x0G family of single-chip Multistandard Sound Processors covers the sound processing of all analog TV-Standards worldwide, as well as the NICAM digital sound standards. The full TV sound processing, starting with analog sound IF signal-in, down to processed analog AF-out, is performed on a single chip.

These TV sound processing ICs include versions for processing the multichannel television sound (MTS) signal conforming to the standard recommended by the Broadcast Television Systems Committee (BTSC). The DBX noise reduction, or alternatively, Micronas Noise Reduction (MNR) is performed alignment free. Other processed standards are the Japanese FM-FM multiplex standard (EIA-J) and the FM Stereo Radio standard.

Current ICs have to perform adjustment procedures in order to achieve good stereo separation for BTSC and EIA-J. The MSP 34x1G has optimum stereo performance without any adjustments.

5. AUDIO AMPLIFIER STAGE WITH AN7522

The AN7522 is an audio class-AB amplifier assembled in SIL-12 Pin Plastic Package specially designed for sound cards application. Using this IC chassis operates as a stereo TV set. AN7522 has stand-by feature for low stand-by power consumption and mute feature for pop noise free opening and closing the TV set. It can deliver 2*3W without clipping at 12V/16Ω applications.

6. POWER

The LM2576 series of regulators are monolithic integrated circuits ideally suited for easy and convenient design of a step–down switching regulator (buck converter). All circuits of this series are capable of driving a 3.0A load with excellent line and load regulation. Two different versions (one having a fixed output voltage of 3.3 V, and one with 5.0 V) of this IC are used in the regulator board.

7. MICROCONTROLLER SDA55XX

7.1. General Features

• Feature selection via special function register
• Simultaneous reception of TTX, VPS, PDC, and WSS (line 23)
• Supply Voltage 2.5 and 3.3 V
• ROM version is used.

7.2. External Crystal and Programmable Clock Speed

• Single external 6MHz crystal, all necessary clocks are generated internally
• CPU clock speed selectable via special function registers.
• Normal Mode 33.33 MHz CPU clock, Power Save mode 8.33 MHz

7.3. Microcontroller Features

• 8bit 8051 instruction set compatible CPU.
• 33.33-MHz internal clock (max.)
• 0.360 ms (min.) instruction cycle
• Two 16-bit timers
• Watchdog timer
• Capture compare timer for infrared remote control decoding
• Pulse width modulation unit (2 channels 14 bit, 6 channels 8 bit)
• ADC (4 channels, 8 bit)
• UART (rxd, txd)

7.4. Memory

• Up to 128 Kilobyte on Chip Program ROM
• Eight 16-bit data pointer registers (DPTR)
• 256-bytes on-chip Processor Internal RAM (IRAM)
• 128bytes extended stack memory.
• Display RAM and TXT/VPS/PDC/WSS-Acquisition-Buffer directly accessible via MOVX
• UP to 16KByte on Chip Extended RAM (XRAM) consisting of;
- 1 Kilobyte on-chip ACQ-buffer-RAM (access via MOVX)
- 1 Kilobyte on-chip extended-RAM (XRAM, access via MOVX) for user software
- 3-Kilobyte Display Memory

7.5. Display Features

• ROM Character set supports all East and West European Languages in single device
• Mosaic Graphic Character Set
• Parallel Display Attributes
• Single/Double Width/Height of Characters
• Variable Flash Rate
• Programmable Screen Size (25 Rows x 33...64 Columns)
• Flexible Character Matrixes (HxV) 12 x 9...16
• Up to 256 Dynamical Redefinable Characters in standard mode; 1024 Dynamical Redefinable Characters in Enhanced Mode
• CLUT with up to 4096 colour combinations
• Up to 16 Colours per DRCS Character
• One out of 8 Colours for Foreground and Background Colours for 1-bit DRCS and ROM Characters

7.6. ROM Characters

- Shadowing
- Contrast Reduction
- Pixel by Pixel Shiftable Cursor With up to 4 Different Colours
- Support of Progressive Scan and 100 Hz.
- 3 X 4Bits RGB-DACs On-Chip
- Free Programmable Pixel Clock from 10 MHz to 32MHz
- Pixel Clock Independent from CPU Clock
- Multinorm H/V-Display Synchronisation in Master or Slave Mode

7.7. Acquisition Features

- Multistandard Digital Data Slicer
- Parallel Multi-norm Slicing (TTX, VPS, WSS, CC, G+)
- Four Different Framing Codes Available
- Data Caption only limited by available Memory
- Programmable VBI-buffer
- Full Channel Data Slicing Supported
- Fully Digital Signal Processing
- Noise Measurement and Controlled Noise Compensation
- Attenuation Measurement and Compensation
- Group Delay Measurement and Compensation
- Exact Decoding of Echo Disturbed Signals

7.8. Ports

- One 8-bit I/O-port with open drain output and optional I 2 C Bus emulation support (Port0)
- Two 8-bit multifunction I/O-ports (Port1, Port3)
- One 4-bit port working as digital or analogue inputs for the ADC (Port2)
- One 2-bit I/O port with secondary function (P4.2, 4.3, 4.7)
- One 4-bit I/O-port with secondary function (P4.0, 4.1, 4.4) (Not available in P-SDIP 52)

8. SERIAL ACCESS CMOS 16K (2048*8) EEPROM ST24C16

The ST24C16 is a 16Kbit electrically erasable programmable memory (EEPROM), organised as 8 blocks of 256*8 bits. The memory is compatible with the I²C standard, two wire serial interface, which uses a bi-directional data bus and serial clock. The memory carries a built-in 4 bit, unique device identification code (1010) corresponding to the I²C bus definition. This is used together with 1 chip enable input (E) so that up to 2*8K devices may be attached to the I²C bus and selected individually.

9. CLASS AB STEREO HEADPHONE DRIVER TDA1308

The TDA1308 is an integrated class AB stereo headphone driver contained in a DIP8 plastic package. The device is fabricated in a 1 mm CMOS process and has been primarily developed for portable digital audio applications.

10. SAW FILTERS

K3953M is an IF Filter for Video Applications. The package is SIP5K. Supported standards are B/G, D/K, I, L/L'.
K9656M is an IF Filter for Audio Applications. The package is SIP5K. Supported standards are B/G, D/K, I, L/L'.

PDF created with FinePrint pdfFactory trial version http://www.pdffactory.com

11. IC DESCRIPTIONS AND INTERNAL BLOCK DIAGRAM

LM1117	TDA9885/86
LM2576	TDA1308T
LM317T	AN7522N
TFMS5360	PI5V330
ST24LC21	GM6015
SST37VF040	SAA3010T
TEA5114A	AD9883A
TEA6415	MC141585
VPC3230D	MC34063
SDA55XX	MSP3400G

11.1. LM1117

11.1.1. General Description

The LM1117 is a series of low dropout voltage regulators with a dropout of 1.2V at 800mA of load current. It has the same pin-out as National Semiconductor's industry standard LM317. The LM1117 is available in an adjustable version, which can set the output voltage from 1.25V to 13.8V with only two external resistors. In addition, it is also available in five fixed voltages, 1.8V, 2.5V, 2.85V, 3.3V, and 5V.
The LM1117 offers current limiting and thermal shutdown. Its circuit includes a zener trimmed bandgap reference to as-sure output voltage accuracy to within ±1%. The LM1117 series is available in SOT-223, TO-220, and TO-252 D-PAK packages. A minimum of 10µF tantalum capacitor is required at the output to improve the transient response and stability.

11.1.2. Features

• Available in 1.8V, 2.5V, 2.85V, 3.3V, 5V, and Adjustable Versions
• Space Saving SOT-223 Package
• Current Limiting and Thermal Protection
• Output Current 800mA
• Line Regulation 0.2% (Max)
• Load Regulation 0.4% (Max)
• Temperature Range
— LM1117 0°C to 125°C
— LM1117I -40°C to 125°C
—

11.1.3. Applications

• 2.85V Model for SCSI-2 Active Termination
• Post Regulator for Switching DC/DC Converter
• High Efficiency Linear Regulators
• Battery Charger
• Battery Powered Instrumentation

11.1.4. Connection Diagrams

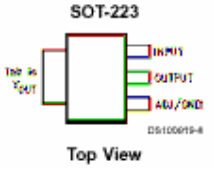

Top View

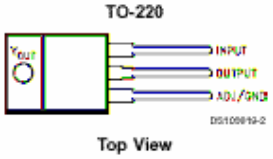

Top View

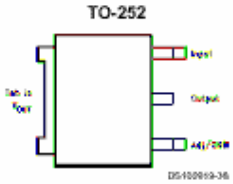

Top View

11.2. LM2576

11.2.1. General Description

The LM2576 series of regulators are monolithic integrated circuits ideally suited for easy and convenient design of a step–down switching regulator (buck converter). All circuits of this series are capable of driving a 3.0 A load with excellent line and load regulation.
These devices are available in fixed output voltages of 3.3 V, 5.0 V, 12 V, 15 V, and an adjustable output version. These regulators were designed to minimize the number of external components to simplify the power supply design. Standard series of inductors optimized for use with the LM2576 are offered by several different inductor manufacturers.
Since the LM2576 converter is a switch–mode power supply, its efficiency is significantly higher in comparison with popular three–terminal linear regulators, especially with higher input voltages. In many cases, the power dissipated is so low that no heatsink is required or its size could be reduced dramatically.
A standard series of inductors optimized for use with the LM2576 are available from several different manufacturers. This feature greatly simplifies the design of switch–mode power supplies.
The LM2576 features include a guaranteed ±4% tolerance on output voltage within specified input voltages and output load conditions, and ±10% on the oscillator frequency (±2% over 0°C to 125°C). External shutdown is included, featuring 80 mA (typical) standby current. The output switch includes cycle–by–cycle current limiting, as well as
thermal shutdown for full protection under fault conditions.

11.2.2. Features

- 3.3 V, 5.0 V, 12 V, 15 V, and Adjustable Output Versions
- Adjustable Version Output Voltage Range, 1.23 to 37 V ±4% Maximum Over Line and Load Conditions
- Guaranteed 3.0 A Output Current
- Wide Input Voltage Range
- Requires Only 4 External Components
- 52 kHz Fixed Frequency Internal Oscillator
- TTL Shutdown Capability, Low Power Standby Mode
- High Efficiency
- Uses Readily Available Standard Inductors
- Thermal Shutdown and Current Limit Protection
- Moisture Sensitivity Level (MSL) Equals 1

11.2.3. Pin description

TO–220
TV SUFFIX
CASE 314B

Heatsink surface connected to Pin 3

TO–220
T SUFFIX
CASE 314D

Pin 1. V_{in}
2. Output
3. Ground
4. Feedback
5. $\overline{ON}$/OFF

PDF created with FinePrint pdfFactory trial version http://www.pdffactory.com

11.3. LM317T

11.3.1. Description

The LM317T is an adjustable 3 terminal positive voltage regulator capable of supplying in excess of 1.5 amps over an output range of 1.25 to 37 volts. This voltage regulator is exceptionally easy to use and requires only two external resistors to set the output voltage. Further, it employs internal current limiting, thermal shutdown and safe area compensation, making it essentially blow–out proof. The LM317 serves a wide variety of applications including local, on card regulation. This device can also be used to make a programmable output regulator, or by connecting a fixed resistor between the adjustment and output, the LM317 can be used as a precision current regulator.

11.3.2. Features

• Output Current in Excess of 1.5 A
• Output Adjustable between 1.2 V and 37 V
• Internal Thermal Overload Protection
• Internal Short Circuit Current Limiting Constant with Temperature
• Output Transistor Safe–Area Compensation
• Floating Operation for High Voltage Applications
• Available in Surface Mount D^2PAK, and Standard 3–Lead Transistor Package
• Eliminates Stocking many Fixed Voltages

11.4. TFMS5360

11.4.1. Description

The TFMS5360 is a miniature receiver for infrared remote control systems.

11.4.2. Features

• Photo detector and preamplifier in one.
• 36 KHZ
• Pin diode and preamp
• IR filter.

11.5. ST24LC21

11.5.1. Description

The ST24LC21 is a 1K bit electrically erasable programmable memory (EEPROM), organized by 8 bits. This device can operate in two modes: Transmit Only mode and I^2C bidirectional mode. When powered, the device is in Transmit Only mode with EEPROM data clocked out from the rising edge of the signal applied on VCLK. The device will switch to the I^2C bidirectional mode upon the falling edge of the signal applied on SCL pin. The ST24LC21 can not switch from the I^2C bidirectional mode to the Transmit Only mode (except when the power supply is removed). The device operates with a power supply value as low as 2.5V. Both Plastic Dual-in-Line and Plastic Small Outline packages are available.

11.5.2. Features

• 1 million Erase/Write cycles
• 40 years data retention
• 2.5V to 5.5V single supply voltage
• 400k Hz compatibility over the full range of supply voltage
• Two wire serial interface I^2C bus compatible
• Page Write (Up To 8 Bytes)
• Byte, random and sequential read modes
• Self timed programming cycle
• Automatic address incrementing
• Enhanced ESD/Latch up
• Performances

11.5.3. Pin connections

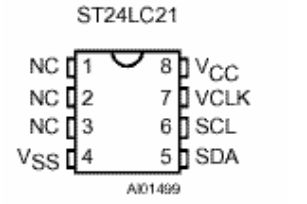

DIP Pin connections

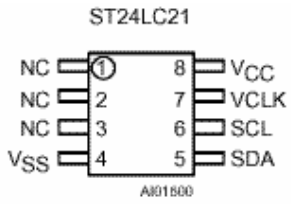

CO Pin connections

NC: Not connected

Signal names

SDA	Serial data Address Input/Output
SCL	Serial Clock (I^2C mode)
V_{cc}	Supply voltage
V_{ss}	Ground
VCLK	Clock transmit only mode

11.6. SST37VF040

11.6.1. Description

The SST37VF512/010/020/040 devices are 64K x8 / 128Kx8 / 256K x8 / 512K x8 CMOS, Many-Time Programmable (MTP), low cost flash, manufactured with SST's proprietary, high performance CMOS Super Flash technology. The split-gate cell design and thick oxide tunneling injector attain better reliability and manufacturability compared with alternate approaches. The SST37VF512/010/020/040 can be electrically erased and programmed at least 1000 times using an external programmer, e.g., to change the contents of devices in inventory. The SST37VF512/010/020/040 have to be erased prior to programming. These devices conform to JEDEC standard pinouts for byte-wide flash memories. Featuring high performance Byte-Program, the SST37VF512/010/020/040 provide a typical Byte-Pro-gram time of 10 µs. Designed, manufactured, and tested for a wide spectrum of applications, these devices are offered with an endurance of at least 1000 cycles. Data retention is rated at greater than 100 years. The SST37VF512/010/020/040 are suited for applications that require infrequent writes and low power nonvolatile storage. These devices will improve flexibility, efficiency and performance while matching the low cost in nonvolatile applications that currently use UV-EPROMs, OTPs, and mask ROMs.

11.6.2. Features

• Organized as 64K x8 / 128K x8 / 256K x8 / 512K x8
• 2.7-3.6V Read Operation
• Superior Reliability
– Endurance: At least 1000 Cycles
– Greater than 100 years Data Retention
• Low Power Consumption:
– Active Current: 10 mA (typical)
– Standby Current: 2 µA (typical)
• Fast Read Access Time:
– 70 ns
– 90 ns
• Latched Address and Data
• Fast Byte-Program Operation:
– Byte-Program Time: 10 µs (typical)
– Chip Program Time:
0.6 seconds (typical) for SST37VF512
1.2 seconds (typical) for SST37VF010
2.4 seconds (typical) for SST37VF020
4.8 seconds (typical) for SST37VF040
• Electrical Erase Using Programmer
– Does not require UV source
– Chip-Erase Time: 100 ms (typical)
• CMOS I/O Compatibility
• JEDEC Standard Byte-wide Flash EEPROM Pinouts
• Packages Available
– 32-lead PLCC
– 32-lead TSOP (8mm x 14mm)
– 32-pin PDIP

11.6.3. Pin Description

Symbol	Pin name	Functions
A_{MS}[1]-A_0	Address Inputs	To provide memory addresses.
D_{Q7}-D_{Q0}	Data Input/output	To output data during Read cycles and receive input data during Program cycles. The outputs are in tri-state when OE# or CE# is high.
CE#	Chip Enable	To activate the device when CE# is low.
WE#	Write Enable	To program or erase (WE# = VIL pulse during Program or Erase)
OE#	Output Enable	To gate the data output buffers during Read operation when low
V_{DD}	Power Supply	To provide 3.0V supply (2.7-3.6V)
V_{SS}	Ground	
NC	No Connection	Unconnected pins.

11.7. TEA5114A

11.7.1. General description

This integrated circuit provides RGB switching allowing connections between peri TV plug, internal RGB generator and video processor in a TV set.
The input signal black level is tied to the same reference voltage on each input in order to have no differential voltage when switching two RGB generators.
An AC output signal higher than 2 Vpp makes gain going slowly down to 0dBto protect the TV set video amplifier from saturation.
Fast blanking output is a logical OR between FB1 (Pin 8) and FB2 (Pin 10).

11.7.2. Features

- 25MHz Bandwidth
- Crosstalk : 55dB
- Short circuit to ground or V_{CC} protected
- Anti saturation gain changing
- Video switching

11.7.3. Pin Connections

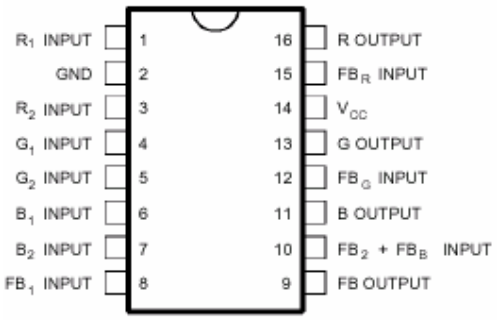

11.8. TEA6415

11.8.1. General description

The main function of the IC is to switch 8 video input sources on 6 outputs. Each output can be switched on only one of each input. On each input an alignment of the lowest level of the signal is made (bottom of synch. top for CVBS or black level for RGB signals). Each nominal gain between any input and output is 6.5dB. For D2MAC or Chroma signal the alignment is switched off by forcing, with an external resistor bridge, 5 V_{DC} on the input. Each input can be used as a normal input or as a MAC or Chroma input (with external resistor bridge). All the switching possibilities are changed through the BUS. Driving 75Ω load needs an external transistor. It is possible to have the same input connected to several outputs. The starting configuration upon power on (power supply: 0 to 10V) is undetermined. In this case, 6 words of 16 bits are necessary to determine one configuration. In other case, 1 word of 16 bits is necessary to determine one configuration.

11.8.2. 13.5.2.Features

• 20MHz Bandwidth
• Cascadable with another TEA6415C (Internal address can be changed by pin 7 voltage)
• 8 Inputs (CVBS, RGB, MAC, CHROMA,...)
• 6 Outputs
• Possibility of MAC or chroma signal for each input by switching-off the clamp with an external resistor bridge
• Bus controlled
• 6.5dB gain between any input and output
• 55dB crosstalk at 5mHz
• Fully ESD protected

11.8.3. 13.5.3.Pinning

1.	Input	:	Max : 2Vpp, Input Current: 1mA, Max: 3mA
2.	Data	:	Low level : -0.3V Max: 1.5V, High level : 3.0V Max : Vcc+0.5V
3.	Input	:	Max : 2Vpp, Input Current: 1mA, Max : 3mA
4.	Clock	:	Low level : -0.3V Max: 1.5V, High level : 3.0V Max : Vcc+0.5V
5.	Input	:	Max : 2Vpp, Input Current: 1mA, Max: 3mA
6.	Input	:	Max : 2Vpp, Input Current: 1mA, Max: 3mA
7.	Prog		
8.	Input	:	Max : 2Vpp, Input Current: 1mA, Max: 3mA
9.	Vcc	:	12V
10.	Input	:	Max : 2Vpp, Input Current: 1mA, Max: 3mA
11.	Input	:	Max : 2Vpp, Input Current: 1mA, Max: 3mA
12.	Ground		
13.	Output :	5.5Vpp,	Min : 4.5Vpp
14.	Output :	5.5Vpp,	Min : 4.5Vpp
15.	Output :	5.5Vpp,	Min : 4.5Vpp
16.	Output :	5.5Vpp,	Min : 4.5Vpp
17.	Output :	5.5Vpp,	Min : 4.5Vpp
18.	Output :	5.5Vpp, Min : 4.5Vpp	
19.	Ground		
20.	Input	:	Max : 2Vpp, Input Current : 1mA, Max : 3mA

11.9. VPC3230D

11.9.1. General Description

The VPC 323xD is a high-quality, single-chip video front-end, which is targeted for 4:3 and 16:9, 50/60-Hz and 100/120 Hz TV sets. It can be combined with other members of the DIGIT3000 IC family (such as DDP 331x) and/or it can be used with 3rd-party products.
The main features of the VPC 323xD are
• high-performance adaptive 4H comb filter Y/C separator with adjustable vertical peaking
• multi-standard colour decoder PAL/NTSC/SECAM including all substandards
• four CVBS, one S-VHS input, one CVBS output
• two RGB/YCr Cb component inputs, one Fast Blank (FB) input
• integrated high-quality A/D converters and associated clamp and AGC circuits
• multi-standard sync processing
• linear horizontal scaling (0.25 ... 4), as well as non-linear horizontal scaling 'Panorama-vision'
• PAL+ preprocessing
• line-locked clock, data and sync, or 656-output interface
• peaking, contrast, brightness, color saturation and tint for RGB/ YC r C b and CVBS/ S-VHS
• high-quality soft mixer controlled by Fast Blank
• PIP processing for four picture sizes (1/4, 1/9, 1/16 or 1/36 of normal size) with 8-bit resolution
• 15 predefined PIP display configurations and expert mode (fully programmable)
• control interface for external field memory
• I^2C-bus interface
• one 20.25-MHz crystal, few external components
• 80-pin PQFP package

11.9.2. Pin Connections and Short Descriptions

NC = not connected
LV = if not used, leave vacant
X = obligatory; connect as described in circuit diagram
SUPPLYA = 4.75...5.25 V, SUPPLYD = 3.15...3.45 V

Pin No. PQFP 80-pin	Pin Name	Type	Connection (if not used)	Short Description
1	B1/CB1IN	IN	VREF	Blue1/Cb1 Analog Component Input
2	G1/Y1IN	IN	VREF	Green1/Y1 Analog Component Input
3	R1/CR1IN	IN	VREF	Read1/Cr1 Analog Component Input
4	B2/CB2IN	IN	VREF	Blue2/Cb2 Analog Component Input
5	G2/Y2IN	IN	VREF	Green2/Y2 Analog Component Input
6	R2/CR2IN	IN	VREF	Read2/Cr2 Analog Component Input
7	ASGF		X	Analog Shield GND_F
8	FFRSTWIN	IN	LV or GND_D	FIFO Reset Write Input
9	V_{SUPCAP}	OUT	X	Digital Decoupling Circuitry Supply Voltage
10	V_{SUPD}	SUPPLYD	X	Supply Voltage, Digital Circuitry
11	GND_D	SUPPLYD	X	Ground, Digital Circuitry
12	GND_{CAP}	OUT	X	Digital Decoupling Circuitry GND
13	SCL	IN/OUT	X	I^2C Bus Clock
14	SDA	IN/OUT	X	I^2C Bus Data
15	RESQ	IN	X	Reset Input, Active Low
16	TEST	IN	GND_D	Test Pin, connect to GND_D
17	VGAV	IN	GND_D	VGAV Input
18	YCOEQ	IN	GND_D	Y/C Output Enable Input, Active Low
19	FFIE	OUT	LV	FIFO Input Enable
20	FFWE	OUT	LV	FIFO Write Enable
21	FFRSTW	OUT	LV	FIFO Reset Write/Read
22	FFRE	OUT	LV	FIFO Read Enable
23	FFOE	OUT	LV	FIFO Output Enable
24	CLK20	IN/OUT	LV	Main Clock output 20.25 MHz
25	GND_{PA}	OUT	X	Pad Decoupling Circuitry GND
26	V_{SUPPA}	OUT	X	Pad Decoupling Circuitry Supply Voltage
27	LLC2	OUT	LV	Double Clock Output
28	LLC1	IN/OUT	LV	Clock Output
29	V_{SUPLLC}	SUPPLYD	X	Supply Voltage, LLC Circuitry

30	GND_{LLC}	SUPPLYD	X	Ground, LLC Circuitry
31	Y7	OUT	GND_Y	Picture Bus Luma (MSB)
32	Y6	OUT	GND_Y	Picture Bus Luma
33	Y5	OUT	GND_Y	Picture Bus Luma
34	Y4	OUT	GND_Y	Picture Bus Luma
35	GND_Y	SUPPLYD	X	Ground, Luma Output Circuitry
36	V_{SUPY}	SUPPLYD	X	Supply Voltage, Luma Output Circuitry
37	Y3	OUT	GND_Y	Picture Bus Luma
38	Y2	OUT	GND_Y	Picture Bus Luma
39	Y1	OUT	GND_Y	Picture Bus Luma
40	Y0	OUT	GND_Y	Picture Bus Luma (LSB)
41	C7	OUT	GND_C	Picture Bus Chroma (MSB)
42	C6	OUT	GND_C	Picture Bus Chroma
43	C5	OUT	GND_C	Picture Bus Chroma
44	C4	OUT	GND_C	Picture Bus Chroma
45	V_{SUPC}	SUPPLYD	X	Supply Voltage, Chroma Output Circuitry
46	GND_C	SUPPLYD	X	Ground, Chroma Output Circuitry
47	C3	OUT	GND_C	Picture Bus Chroma
48	C2	OUT	GND_C	Picture Bus Chroma
49	C1	OUT	GND_C	Picture Bus Chroma
50	C0	OUT	GND_C	Picture Bus Chroma (LSB)
51	GND_{SY}	SUPPLYD	X	Ground Sync Pad Circuitry
52	V_{SUPSY}	SUPPLYD	X	Supply Voltage, Sync Pad Circuitry
53	INTLC	OUT	LV	Interlace Output
54	AVO	OUT	LV	Active Video Output
55	FSY/HC/HSYA	OUT	LV	Front Sync/ Horizontal Clamp Pulse/Front-End Horizontal Sync Output
56	MSY/HS	IN/OUT	LV	Main Sync/Horizontal Sync Pulse
57	VS	OUT	LV	Vertical Sync Pulse
58	FPDAT/VSYA	IN/OUT	LV	Front End/Back-End Data/Front-End Vertical Sync Output
59	V_{STBYY}	SUPPLYA	X	Standby Supply Voltage
60	CLK5	OUT	LV	CCU 5 MHz Clock Output
61	NC	-	LV or GND_D	Not Connected
62	XTAL1	IN	X	Analog Crystal Input
63	XTAL2	OUT	X	Analog Crystal Output
64	ASGF		X	Analog Shield GND_F
65	GND_F	SUPPLYA	X	Ground, Analog Front-End
66	VRT	OUTPUT	X	Reference Voltage Top, Analog
67	I2CSEL	IN	X	I^2C Bus Address Select
68	ISGND	SUPPLYA	X	Signal Ground for Analog Input, connect to GND_F
69	V_{SUPF}	SUPPLYA	X	Supply Voltage, Analog Front-End
70	VOUT	OUT	LV	Analog Video Output
71	CIN	IN	LV	Chroma/Analog Video 5 Input
72	VIN1	IN	VRT	Video 1 Analog Input
73	VIN2	IN	VRT	Video 2 Analog Input
74	VIN3	IN	VRT	Video 3 Analog Input
75	VIN4	IN	VRT	Video 4 Analog Input
76	V_{SUPAI}	SUPPLYA	X	Supply Voltage, Analog Component Inputs Front-End
77	GND_{AI}	SUPPLYA	X	Ground, Analog Component Inputs Front-End
78	VREF	OUTPUT	X	Reference Voltage Top, Analog Component Inputs Front-End
79	FB1IN	IN	VREF	Fast Blank Input
80	AISGND	SUPPLYA	X	Signal Ground for Analog Component Inputs, connect to GND_{AI}

11.10. SDA55XX (SDA5550)

11.10.1. General description

The SDA55XX is a single chip teletext decoder for decoding World System Teletext data as well as Video Programming System (VPS), Program Delivery Control (PDC), and Wide Screen Signalling (WSS) data used for PAL plus transmissions (Line 23). The device also supports Closed caption acquisition and decoding. The device provides an integrated general-purpose, fully 8051-compatible Microcontroller with television specific hardware features. Microcontroller has been enhanced to provide powerful features such as memory banking, data pointers, and additional interrupts etc. The on-chip display unit for displaying Level 1.5 teletext data can also be used for customer defined on screen displays. Internal XRAM consists of up to16 Kbytes. Device has an internal ROM of up to 128 KBytes. ROMless versions can access up to 1 MByte of external RAM and ROM. The SDA 55XX supports a wide range of standards including PAL, NTSC and contains a digital slicer for VPS, WSS, PDC, TTX and Closed Caption, an accelerating acquisition hardware module, a display generator for Level 1.5 TTX data and powerful On screen Display capabilities based on parallel attributes, and Pixel oriented characters (DRCS).
The 8-bit Microcontroller runs at 360 ns. cycle time (min.). Controller with dedicated hardware does most of the internal TTX acquisition processing, transfers data to/from external memory interface and receives/ transmits data via I^2C-firmware user-interface. The slicer combined with dedicated hardware stores TTX data in a VBI buffer of 1 Kilobyte. The Microcontroller firmware performs all the acquisition tasks (hamming and parity-checks, page search and evaluation of header control bits) once per field. Additionally, the firmware can provide high-end Teletext features like Packet-26-handling, FLOF, TOP and list-pages. The interface to user software is optimized for minimal overhead. SDA 55XX is realized in 0.25 micron technology with 2.5 V supply voltage and 3.3 V I/O (TTL compatible). The software and hardware development environment (TEAM) is available to simplify and speed up the development of the software and On Screen Display. TEAM stands for TVT Expert Application Maker. It improves the TV controller software quality in following aspects:
– Shorter time to market
– Re-usability
– Target independent development
– Verification and validation before targeting
– General test concept
– Graphical interface design requiring minimum programming and controller know how.
– Modular and open tool chain, configurable by customer.

11.11. TDA9885/86

11.11.1. General description

The TDA9885 is an alignment-free single standard (without positive modulation) vision and sound IF signal PLL. The TDA9886 is an alignment-free multistandard (PAL, SECAM and NTSC) vision and sound IF signal PLL demodulator for positive and negative modulation including sound AM and FM processing.
Both devices can be used for TV, VTR, PC and set-top box applications.

11.11.2. Features

• 5 V supply voltage
• Gain controlled wide-band Vision Intermediate Frequency (VIF) amplifier (AC-coupled)
• Multistandard true synchronous demodulation with active carrier regeneration (very linear demodulation, good intermodulation figures, reduced harmonics, excellent pulse response)
• Gated phase detector for L/L accent standard
• Fully integrated VIF Voltage Controlled Oscillator (VCO), alignment-free; frequencies switchable for all negative and positive modulated standards via I^2C-bus
• Digital acquisition help, VIF frequencies of 33.4, 33.9, 38.0, 38.9, 45.75 and 58.75 MHz
• 4 MHz reference frequency input [signal from Phase-Locked Loop (PLL) tuning system] or operating as crystal oscillator
• VIF Automatic Gain Control (AGC) detector for gain control, operating as peak sync detector for negative modulated signals and as a peak white detector for positive modulated signals
• Precise fully digital Automatic Frequency Control (AFC) detector with 4-bit digital-to-analog converter; AFC bits via I^2C -bus readable
• TakeOver Point (TOP) adjustable via I^2C-bus or alternatively with potentiometer
• Fully integrated sound carrier trap for 4.5, 5.5, 6.0 and 6.5 MHz, controlled by FM-PLL oscillator
• Sound IF (SIF) input for single reference Quasi Split Sound (QSS) mode (PLL controlled)
• SIF AGC for gain controlled SIF amplifier; single reference QSS mixer able to operate in high performance single reference QSS mode and in intercarrier mode, switchable via I^2C-bus
• AM demodulator without extra reference circuit
• Alignment-free selective FM-PLL demodulator with high linearity and low noise
• I^2C-bus control for all functions
• I^2C-bus transceiver with pin programmable Module Address (MAD).

11.11.3. Pinning

SYMBOL	PIN	DESCRIPTION
VIF1	1	VIF differential input 1
VIF2	2	VIF differential input 2
OP1	3	output 1 (open-collector)
FMPLL	4	FM-PLL for loop filter
DEEM	5	de-emphasis output for capacitor
AFD	6	AF decoupling input for capacitor
DGND	7	digital ground
AUD	8	audio output
TOP	9	tuner AGC TakeOver Point (TOP)
SDA	10	I^2C-bus data input/output
SCL	11	I^2C-bus clock input
SIOMA	12	sound intercarrier output and MAD select
n.c.	13	not connected
TAGC	14	tuner AGC output
REF	15	4 MHz crystal or reference input
VAGC	16	VIF-AGC for capacitor; (Not connected for TDA9885)
CVBS	17	video output
AGND	18	analog ground
VPLL	19	VIF-PLL for loop filter
V_P	20	supply voltage (+5 V)
AFC	21	AFC output
OP2	22	output 2 (open-collector)
SIF1	23	SIF differential input 1
SIF2	24	SIF differential input 2

11.12. TDA1308

11.12.1. General Description

The TDA1308 is an integrated class AB stereo headphone driver contained in an SO8 or a DIP8 plastic package. The device is fabricated in a 1 mm CMOS process and has been primarily developed for portable digital audio applications.

11.12.2. Features

- Wide temperature range
- No switch ON/OFF clicks
- Excellent power supply ripple rejection
- Low power consumption
- Short-circuit resistant
- High performance
- high signal-to-noise ratio
- High slew rate
- Low distortion
- Large output voltage swing.

11.12.3. Pinning

SYMBOL	PIN	DESCRIPTION	PIN VALUE
OUTA	1	Output A (Voltage swing)	Min : 0.75V, Max : 4.25V
INA(neg)	2	Inverting input A	Vo(clip) : Min : 1400mVrms
INA(pos)	3	Non-inverting input A	2.5V
V_{SS}	4	Negative supply	0V
INB(pos)	5	Non-inverting input B	2.5V
INB(neg)	6	Inverting input B	Vo(clip) : Min : 1400mVrms
OUTB	7	Output B (Voltage swing)	Min : 0.75V, Max : 4.25V
V_{DD}	8	Positive supply	5V, Min : 3.0V, Max : 7.0V

11.13. AN7522N

11.13.1. General description

AN7522N is a BTL 5.0W x 2ch Power Amplifier with Standby and Volume Function Silicon Monolithic Bipolar IC. It is used for low frequency amplifier applications.

11.13.2. Pin Descriptions

Pin No	Description	Pin No	Description
1	Vcc	7	GND (Input)
2	Ch.1 Output (+)	8	Ch.2 Input
3	GND (Ch.1 Output)	9	Volume
4	Ch.1 Output (-)	10	Ch.2 Output (-)
5	Standby	11	GND (Ch.2 Output)
6	Ch.1 Input	12	Ch.2 Output (+)

11.14. PI5V330

11.14.1. General description

Pericom Semiconductor's PI5V series of mixed signal video circuits are produced in the Company's advanced CMOS low-power technology, achieving industry leading performance.
The PI5V330 is a true bidirectional Quad 2-channel multiplexer/demultiplexer that is recommended for both RGB and composite video switching applications. The VideoSwitch™ can be driven from a current output RAMDAC or voltage output composite video source.
Low ON-resistance and wide bandwidth make it ideal for video and other applications. Also this device has exceptionally high current capability which is far greater than most
analog switches offered today. A single 5V supply is all that is required for operation.
The PI5V330 offers a high-performance, low-cost solution to switch between video sources. The application section describes the PI5V330 replacing the HC4053 multiplier and buffer/amplifier.

11.14.2. Features

• High-performance, low-cost solution to switch between video sources
• Wide bandwidth: 200 MHz
• Low ON-resistance: 3W
• Low crosstalk at 10 MHz: –58 dB
• Ultra-low quiescent power (0.1 µA typical)
• Single supply operation: +5.0V
• Fast switching: 10 ns
• High-current output: 100 mA
• Packages available:
– 16-pin 300-mil wide plastic SOIC (S)
– 16-pin 150-mil wide plastic SOIC (W)
– 16-pin 150-mil wide plastic QSOP (Q)

11.14.3. Pin Descriptions

Pin Name	Description
$S1_A$, $S2_A$ $S1_B$, $S2_B$ $S1_C$, $S2_C$ $S1_D$, $S2_D$	Analog Video I/O
IN	Select Input
EN	Enable
D_A, D_B, D_C, D_D	Analog Video I/O
GND	Ground
V_{CC}	Power

11.15. GM6015

11.15.1. General description

The Genesis Microchip 6015RD1 LCD TV reference board is a complete display processor for LCD, PDP and LCOS based televisions. The reference board demonstrates the processing capabilities of the Genesis Microchip gm6015 television controller IC. The gm6015 IC is a full-featured, dual-channel video processor with Genesis industry leading Crystal Ciema Plus™ video scan conversion. The 6015RD1 board inputs analog YPbPr/RGB, NTSC/PAL/SECAM CVBS/YC, UHF/VHF and outputs digital RGB to an XGA LCD panel. A convenient on-screen display system provides easy control of the board's processing capabilities. The design kit is complete with hardware and software. Software includes G-Probe debug software, G-Wizard register calculator and G-TV application source code.
The 6015RD1 is a related reference board that outputs analog YpbPr/RGB.

11.15.2. Features

- Dual channel, gm6015 based LCD TV system
- Industry leading Crystal Cinema Plus video scan conversion
- Inputs:
  i. Component analog YPbPr/RGB
  ii. 480/576I, 480/576P, 720P and 1080I HD
  iii. Dual NTSC/PAL/SECAM CVBS and YC
  iv. VGA, SVGA, XGA PC graphics
  v. Separate, composite or sync on Y/G
  vi. UHF/VHF RF (NTSC)
- Default output with XGA LCD interface PCB:
  i. Component analog YpbPr/RGB
- Other outputs:
  ii. 8/16/20/24-bit 4:2:2/4:4:4 digital YCbCr/RGB
  iii. 480/576I, 480/576P, 720P and 1080I HD
  iv. VGA, SVGA, XGA PC graphics
  v. Separate, composite or sync on Y/G
- On-screen display (OSD) user interface with automated self running demonstration
- Small form factor PCB

11.16. SAA3010T

11.16.1. Description

The SAA3010 is intended as a general purpose (RC-5) infrared remote control system for use where a low voltage supply and a large debounce time are expected. The device can generate 2048 different commands and utilizes a keyboard with a single pole switch for each key. The commands are arranged so that 32 systems can be addressed, each system containing 64 different commands. The circuit response to legal (one key pressed at a time) and illegal (more than one key pressed at a time) keyboard operation is specified in the section “Keyboard operation”.

11.16.2. Features

- Low voltage requirement
- Biphase transmission technique
- Single pin oscillator
- Test mode facility

11.16.3. Pinning

Pin	Mnemonic	Function
1	X7 (IPU)	Sense input from key matrix
2	SSM (I)	Sense mode selection input
3	Z0-Z3 (IPU)	Sense inputs from key matrix
7	MDATA (OP3)	Generated output data modulated with 1/12 the oscillator frequency at a 25% duty factor
8	DATA (OP3)	Generated output information
9-13	DR7-DR3 (ODN)	Scan drivers
14	VSS	Ground (0V)
15-17	DR-2-DR0 (ODN)	Scan drivers
18	OSC (I)	Oscillator input
19	TP2 (I)	Test point 2
20	TP1 (I)	Test point 1
21-27	X0-X6 (IPU)	Sense inputs from key matrix
28	VDD(I)	Voltage supply

Note:
(I): Input,
(IPU): input with p-channel pull-up transistor,
(ODN): output with open drain n-channel transistor
(OD3): output 3-state

11.17. AD9883A

11.17.1. General description

The AD9883A is a complete 8-bit, 140 MSPS monolithic analog interface optimized for capturing RGB graphics signals from personal computers and workstations. Its 140 MSPS encode rate capability and full power analog bandwidth of 300 MHz supports resolutions up to SXGA (1280 1024 at 75 Hz).
The AD9883A includes a 140 MHz triple ADC with internal 1.25 V reference, a PLL, and programmable gain, offset, and clamp control. The user provides only a 3.3 V power supply, analog input, and Hsync and COAST signals. Three-state CMOS outputs may be powered from 2.5 V to 3.3 V.
The AD9883A's on-chip PLL generates a pixel clock from the Hsync input. Pixel clock output frequencies range from 12 MHz to 140 MHz. PLL clock jitter is 500 ps p-p typical at 140 MSPS. When the COAST signal is presented, the PLL maintains its output frequency in the absence of Hsync. A sampling phase adjustment is provided. Data, Hsync, and clock output phase relationships are maintained. The AD9883A also offers full sync processing for composite sync and sync-on-green applications.
A clamp signal is generated internally or may be provided by the user through the CLAMP input pin. This interface is fully programmable via a 2-wire serial interface.
Fabricated in an advanced CMOS process, the AD9883A is provided in a space-saving 80-lead LQFP surface-mount plastic package and is specified over the 0C to 70C temperature range.

11.17.2. Features

• 140 MSPS Maximum Conversion Rate
• 300 MHz Analog Bandwidth
• 0.5 V to 1.0 V Analog Input Range
• 500 ps p-p PLL Clock Jitter at 110 MSPS
• 3.3 V Power Supply
• Full Sync Processing
• Sync Detect for " Plugging "
• Midscale Clamping
• Power-Down Mode
• Low Power:500 mW Typical
• 4:2:2 Output Format Mode

11.17.3. Pin Descriptions

Pin Name	Function
OUTPUTS	
HSOUT	Horizontal Sync Output A reconstructed and phase-aligned version of the Hsync input. Both the polarity and duration of this output can be programmed via serial bus registers. By maintaining alignment with DATACK and Data, data timing with respect to horizontal sync can always be determined.
VSOUT	Vertical Sync Output A reconstructed and phase-aligned version of the video Vsync. The polarity of this output can be controlled via a serial bus bit. The placement and duration in all modes is set by the graphics transmitter.
SOGOUT	Sync-On-Green Slicer Output This pin outputs either the signal from the Sync-on-Green slicer comparator or an unprocessed but delayed version of the Hsync input. (Note: Besides slicing off SOG, the output from this pin gets no other additional processing on the AD9883A. Vsync separation is performed via the sync separator.)
SERIAL PORT (2-Wire)	
SDA	Serial Port Data I/O
SCL	Serial Port Data Clock
A0	Serial Port Address Input 1 For a full description of the 2-wire serial register and how it works, refer to the 2-Wire Serial Control Port section.

DATA OUTPUTS RED GREEN BLUE	 Data Output, RED Channel Data Output, GREEN Channel Data Output, BLUE Channel The main data outputs. Bit 7 is the MSB. The delay from pixel sampling time to output is fixed. When the sampling time is changed by adjusting the PHASE register, the output timing is shifted as well. The DATACK and HSOUT outputs are also moved, so the timing relationship among the signals is maintained.
DATA CLOCK OUTPUTS DATACK	 Data Output Clock This is the main clock output signal used to strobe the output data and HSOUT into external logic. It is produced by the internal clock generator and is synchronous with the internal pixel sampling clock. When the sampling time is changed by adjusting the PHASE register, the output timing is shifted as well. The Data, DATACK, and HSOUT outputs are all moved, so the timing relationship among the signals is maintained.
INPUTS RAIN GAIN BAIN	 Analog Input for RED Channel Analog Input for GREEN Channel Analog Input for BLUE Channel High impedance inputs that accept the RED, GREEN, and BLUE channel graphics signals, respectively. (The three channels are identical, and can be used for any colors, but colors are assigned for convenient reference.) They accommodate input signals ranging from 0.5 V to 1.0 V full scale. Signals should be ac-coupled to these pins to support clamp operation.
HSYNC	Horizontal Sync Input This input receives a logic signal that establishes the horizontal timing reference and provides the frequency reference for pixel clock generation. The logic sense of this pin is controlled by serial register 0Eh Bit 6 (Hsync Polarity). Only the leading edge of Hsync is active; the trailing edge is ignored. When Hsync Polarity = 0, the falling edge of Hsync is used. When Hsync Polarity = 1, the rising edge is active. The input includes a Schmitt trigger for noise immunity, with a nominal input threshold of 1.5 V.
VSYNC	Vertical Sync Input This is the input for vertical sync.
SOGIN	Sync-on-Green Input This input is provided to assist with processing signals with embedded sync, typically on the GREEN channel. The pin is connected to a high speed comparator with an internally generated threshold. The threshold level can be programmed in 10 mV steps to any voltage between 10 mV and 330 mV above the negative peak of the input signal. The default voltage threshold is 150 mV. When connected to an ac-coupled graphics signal with embedded sync, it will produce a noninverting digital output on SOGOUT. (This is usually a composite sync signal, containing both vertical and horizontal sync information that must be separated before passing the horizontal sync signal to Hsync.) When not used, this input should be left unconnected. For more details on this function and how it should be configured, refer to the Sync-on-Green section.
CLAMP	External Clamp Input This logic input may be used to define the time during which the input signal is clamped to ground. It should be exercised when the reference dc level is known to be present on the analog input channels, typically during the back porch of the graphics signal. The CLAMP pin is enabled by setting control bit Clamp Function to 1, (register 0FH, Bit 7, default is 0). When disabled, this pin is ignored and the clamp timing is determined internally by counting a delay and duration from the trailing edge of the Hsync input. The logic sense of this pin is controlled by Clamp Polarity register 0FH, Bit 6. When not used, this pin must be grounded and Clamp Function programmed to 0.
COAST	Clock Generator Coast Input (Optional) This input may be used to cause the pixel clock generator to stop synchronizing with Hsync and continue producing a clock at its current frequency and phase. This is useful when processing signals from sources that fail to produce horizontal sync

	pulses during the vertical interval. The COAST signal is generally *not* required for PC-generated signals. The logic sense of this pin is controlled by Coast Polarity (register 0FH, Bit 3). When not used, this pin may be grounded and Coast Polarity programmed to 1, or tied HIGH (to VD through a 10 k resistor) and Coast Polarity programmed to 0. Coast Polarity defaults to 1 at power-up.
REF BYPASS	Internal Reference BYPASS Bypass for the internal 1.25 V band gap reference. It should be connected to ground through a 0.1 µF capacitor. The absolute accuracy of this reference is ±4%, and the temperature coefficient is ±50 ppm, which is adequate for most AD9883A applications. If higher accuracy is required, an external reference may be employed instead.
MIDSCV	Midscale Voltage Reference BYPASS Bypass for the internal midscale voltage reference. It should be connected to ground through a 0.1 µF capacitor. The exact voltage varies with the gain setting of the BLUE channel.
FILT	External Filter Connection For proper operation, the pixel clock generator PLL requires an external filter. Connect the filter shown in Figure 6 to this pin. For optimal performance, minimize noise and parasitics on this node.
POWER SUPPLY V_D	Main Power Supply These pins supply power to the main elements of the circuit. They should be as quiet and filtered as possible.
V_{DD}	Digital Output Power Supply A large number of output pins (up to 25) switching at high speed (up to 110 MHz) generate a lot of power supply transients (noise). These supply pins are identified separately from the VD pins so special care can be taken to minimize output noise transferred into the sensitive analog circuitry. If the AD9883A is interfacing with lower voltage logic, VDD may be connected to a lower supply voltage (as low as 2.5 V) for compatibility.
V_D	Clock Generator Power Supply The most sensitive portion of the AD9883A is the clock generation circuitry. These pins provide power to the clock PLL and help the user design for optimal performance. The designer should provide “quiet,” noise-free power to these pins.
GND	Ground The ground return for all circuitry on chip. It is recommended that the AD9883A be assembled on a single solid ground plane, with careful attention to ground current paths.

11.18. MC141585

11.18.1. General description

This is a high performance HCMOS device designed to interface with a micro controller unit to allow colored symbols or characters to be displayed onto a LCD monitor. Because of the large number of fonts, 512 fonts including 496 standard fonts and 16 multi-color fonts, LMOSD2-16 is suitable to be adopted for the multi-language monitor application especially. It minimizes the MCU's burden through its built-in RAM. By storing a full screen of data and control information, this device has a capability to carry out 'screen-refresh' without any MCU supervision. Programmable hatch pattern generator is added for individual pixel inspection.
Since there is no clearance between characters, special graphics oriented characters can be generated by combining two or more character blocks. The full OSD menu is formed of 15 rows x 30 columns which can by freely positioned on anywhere of the monitor screen by changing vertical or horizontal delay.
Special functions such as character background color, blinking, bordering or shadowing, four-level windows with programmable size, row double height and double width, programmable vertical height of character and row-to-row spacing, and full-screen erasing and Fade-In/Fade-Out are also incorporated. There are 8 color selections for any individual character display with row intensity attribute and window intensity attribute to expand the color mixture on OSD menu.

11.18.2. Features

• Totally 512 Fonts Including 496 Standard Fonts and 16 Multi-Color Fonts.
• 10x18 or 12x18 Font Matrix Selection
• Maximum Pixel CLK of 80MHz
• Maximum input resolution of 1580 dots/line (PIXin/HSYNC ratio)
• Wide Operating Frequency: max. 150KHz for Monitor
• Fully Programmable Character Array of 15 Rows by 30 Columns
• 8-Color Selection for Characters with Color Intensity Attribute on Each Row
• 7-Color Selection for Characters background
• True 16-Color Selection for Windows
• Shadowing on Windows with Programmable Shadow Width/Height/Color
• Fancy Fade-In/Fade-Out Effects
• Programmable Height of Character to Meet Multi-Sync Requirement
• Row To Row Spacing Control to Avoid Expansion Distortion
• Four Programmable Windows with Overlapping Capability
• Character Bordering or Shadowing
• Character/Symbol Blinking Function
• Programmable Vertical and Horizontal Positioning for Display Center
• M_BUS (IIC) Interface with Address $7A

11.18.3. Pin Description

Pin Assignment

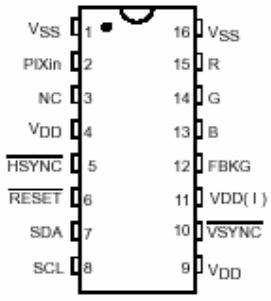

V_{SS}(Pin 1)
This is the ground pin for the chip.

PIXin (Pin 2)
This is the Pixel clock input for chip. The MC141585 chip is driven by this pixel clock for all the logics inside.

NC (Pin 3)
No connection.

V_{DD} (Pin 4)
This is the +5V power pin for the chip.

HSYNC (Pin 5)
This pin inputs a horizontal synchronize signal. It is negative polarity by default. The leading edge of HSYNC synchronizes its internal horizontal timing. The maximum input ratio between PIXin/HSYNC should not greater than 1580 for displaying 12X18 font matrix. For displaying 10X18 font matrix, this ratio should not greater than 1280.

RESET (Pin 6)
An active low signal will reset ROW15 and ROW16 control registers. Refer to Control Registers section for default set-tings. A proper RC network have to be tighten to this pin to ensure the device initialize properly during power up. Refer to the application diagram.

SDA (Pin 7)
Data and control message are being transmitted to this chip from a host MCU via M_bus systems. This wire is configurated as a uni-directional data line. (Detailed description of protocols will be discussed in the M_BUS section).

SCL (Pin 8)
A separate synchronizing clock input from the transmitter is required for M_Bus protocol. Data is read at the rising edge of each clock signal.

V_{DD} (Pin 9)
This is the power pin for the digital logic of the chip.

VSYNC (Pin 10)
Similar to Pin 5, this pin inputs a vertical synchronize signal to synchronize the vertical control circuit. It is negative polarity by default.

V_{DD} (I) (Pin 11)
This is the voltage supply of RGB outputs when low intensity of Windows/ROW is selected. The RBG output level would be equal to VDD(I) in this case. Please refer to Row Attribute/Window registers for more detail. The input voltage for this pin should be equal to or less than V DD (Pin 17) for normal operation.

FBKG (Pin 12)
This pin will output a logic high while displaying characters or windows. It is defaulted to high impedance state after power on, or when there is no output. An external 10 $\kappa\Omega$ resistor pulled low is recommended to avoid level toggling caused by hand effect when there is no output.

B,G,R (Pin 13, 14, 15)
LMOSD2-16 color outputs in CMOS level to the host monitor. These three signals are open drain outputs if 3_STATE bit is set and the color intensity is inactive. Otherwise, they are active high push-pull outputs. See “REGISTERS” for more information. These pins are in high impedance state after power on.

V_{SS} (Pin 24)
This is the ground pin for the digital logic of the chip.

11.19. MC34063

11.19.1. Description

The MC34063A Series is a monolithic control circuit containing the primary functions required for DC–to–DC converters. These devices consist of an internal temperature compensated reference, comparator, controlled duty cycle oscillator with an active current limit circuit, driver and high current output switch. This series was specifically designed to be incorporated in Step–Down and Step–Up and Voltage–Inverting applications with a minimum number of external components.

11.19.2. Features

• Operation from 3.0 V to 40 V Input
• Low Standby Current
• Current Limiting
• Output Switch Current to 1.5 A
• Output Voltage Adjustable
• Frequency Operation to 100 kHz
• Precision 2% Reference

11.19.3. Pin connections

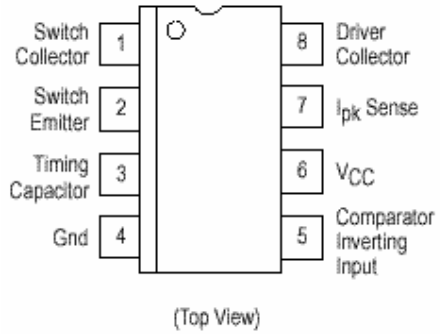

11.20. MSP34X0G

MSP3400G
Multistandard Sound Processor Family

11.20.1. Introduction

The MSP 34x0G family of single-chip Multistandard Sound Processors covers the sound processing of all analog TV-Standards worldwide, as well as the NICAM digital sound standards. The full TV sound processing, starting with analog sound IF signal-in, down to processed analog AF-out, is performed on a single chip. Figure shows a simplified functional block diagram of the MSP 34x0G.
This new generation of TV sound processing ICs now includes versions for processing the multichannel television sound (MTS) signal conforming to the standard recommended by the Broadcast Television Systems Committee (BTSC). The DBX noise reduction, or alternatively, MICRONAS Noise Reduction (MNR) is performed alignment free. Other processed standards are the Japanese FM-FM multiplex standard (EIA-J) and the FM Stereo Radio standard. Current ICs have to perform adjustment procedures in order to achieve good stereo separation for BTSC and EIA-J. The MSP 34x0G has optimum stereo performance without any adjustments.
All MSP 34x0G versions are pin and software downward compatible to the MSP 34x0D. The MSP 34x0G further simplifies controlling software. Standard selection requires a single I²C transmission only.
The MSP 34x0G has built-in automatic functions: The IC is able to detect the actual sound standard automatically (Automatic Standard Detection). Furthermore, pilot levels and identification signals can be evaluated internally with subsequent switching between mono/stereo/bilingual; no I²C interaction is necessary (Automatic Sound Selection).

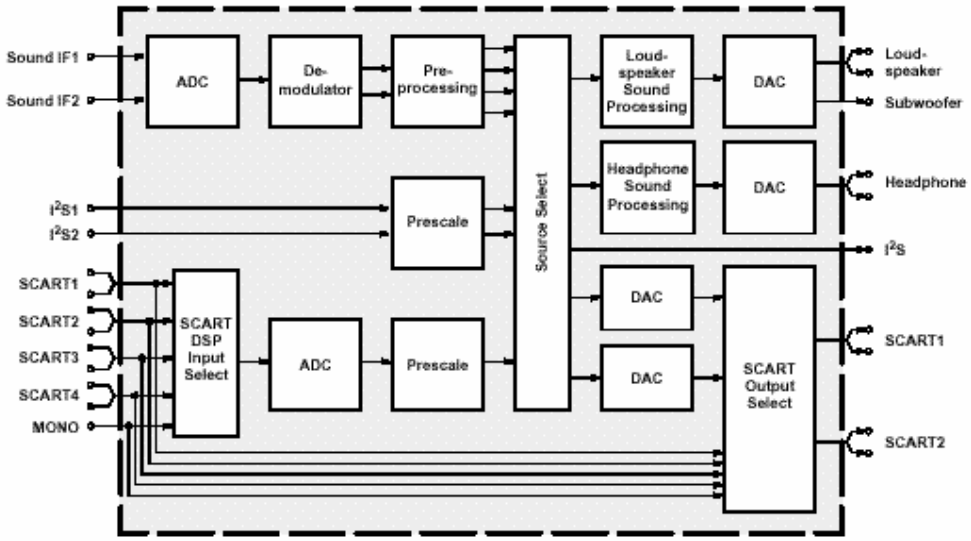

Source Select
I^2S bus interface consists of five pins:
1. I2S_DA_IN1, I2S_DA_IN2: For input, four channels (two channels per line, 2*16 bits) per sampling cycle (32 kHz) are transmitted.
2. I2S_DA_OUT: For output, two channels (2*16 bits) per sampling cycle (32 kHz) are transmitted.
3. I2S_CL: Gives the timing for the transmission of I^2S serial data (1.024 MHz).
4. I2S_WS: The I2S_WS word strobe line defines the left and right sample.

11.20.2. Features

- Standard Selection with single I^2C transmission
- Automatic Standard Detection of terrestrial TV standards
- Automatic Sound Selection (mono/stereo/bilingual), new registers MODUS, STATUS
- Two selectable sound IF (SIF) inputs
- Automatic Carrier Mute function
- Interrupt output programmable (indicating status change)
- Loudspeaker / Headphone channel with volume, balance, bass, treble, loudness
- AVC: Automatic Volume Correction
- Subwoofer output with programmable low-pass and complementary high-pass filter

• 5-band graphic equalizer for loudspeaker channel
• Spatial effect for loudspeaker channel
• Four Stereo SCART (line) inputs, one Mono input; two Stereo SCART outputs
• Complete SCART in/out switching matrix
• Two I^2S inputs; one I^2S output
• Dolby Pro Logic with DPL 351xA coprocessor
• All analog FM-Stereo A2 and satellite standards; AM-SECAM L standard
• Simultaneous demodulation of (very) high-deviation FM-Mono and NICAM
• Adaptive deemphasis for satellite (Wegener-Panda, acc. to ASTRA specification)
• ASTRA Digital Radio (ADR) together with DRP 3510A
• All NICAM standards
• Korean FM-Stereo A2 standard

11.20.3. Pin connections

NC = not connected; leave vacant
LV = if not used, leave vacant
OBL = obligatory; connect as described in circuit diagram
DVSS: if not used, connect to DVSS
AHVSS: connect to AHVSS

Pin No.					Pin Name	Type	Connection (if not used)	Short Description
PLCC 68-pin	PSDIP 64-pin	PSDIP 52-pin	PQFP 80-pin	PLQFP 64-pin				
1	16	14	9	8	ADR_WS	OUT	LV	ADR word strobe
2	-	-	-	-	NC		LV	Not connected
3	15	13	8	7	ADR_DA	OUT	LV	ADR Data Output
4	14	12	7	6	I2S_DA_IN1	IN	LV	I^2S1 data input
5	13	11	6	5	I2S_DA_OUT	OUT	LV	I^2S data output
6	12	10	5	4	I2S_WS	IN/OUT	LV	I^2S word strobe
7	11	9	4	3	I2S_CL	IN/OUT	LV	I^2S clock
8	10	8	3	2	I2C_DA	IN/OUT	OBL	I^2C data
9	9	7	2	1	I2C_CL	IN/OUT	OBL	I^2C clock
10	8	-	1	64	NC		LV	Not connected
11	7	6	80	63	STANDBYQ	IN	OBL	Stand-by (low-active)
12	6	5	79	62	ADR_SEL	IN	OBL	I^2C bus address select
13	5	4	78	61	D_CTR_I/O_0	IN/OUT	LV	D_CTR_I/O_0
14	4	3	77	60	D_CTR_I/O_1	IN/OUT	LV	D_CTR_I/O_1
15	3	-	76	59	NC		LV	Not connected
16	2	-	75	58	NC		LV	Not connected
17	-	-	-	-	NC		LV	Not connected
18	1	2	74	57	AUD_CL_OUT	OUT	LV	Audio clock output (18.432 MHz)
19	64	1	73	56	TP		LV	Test pin
20	63	52	72	55	XTAL_OUT	OUT	OBL	Crystal oscillator
21	62	51	71	54	XTAL_IN	IN	OBL	Crystal oscillator
22	61	50	70	53	TESTEN	IN	OBL	Test pin
23	60	49	69	52	ANA_IN2+	IN	AVSS via 56 pF/LV	IF Input 2 (can be left vacant, only if IF input 1 is also not in use)
24	59	48	68	51	ANA_IN-	IN	AVSS via 56 pF/LV	IF common (can be left vacant, only if IF input 1 is also not in use)
25	58	47	67	50	ANA_IN1+	IN	LV	IF input 1
26	57	46	66	49	AVSUP		OBL	Analog power supply 5V
-	-	-	65	-	AVSUP		OBL	Analog power supply 5V
-	-	-	64	-	NC		LV	Not connected
-	-	-	63	-	NC		LV	Not connected
27	56	45	62	48	AVSS		OBL	Analog ground
-	-	-	61	-	AVSS		OBL	Analog ground
28	55	44	60	47	MONO_IN	IN	LV	Mono input
-	-	-	59	-	NC		LV	Not connected
29	54	43	58	46	VREFTOP		OBL	Reference voltage IF A/D converter
30	53	42	57	45	SC1_IN_R	IN	LV	SCART 1 input, right
31	52	41	56	44	SC1_IN_L	IN	LV	SCART 1 input, left
32	51	-	55	43	ASG1		AHVSS	Analog Shield Ground 1
33	50	40	54	42	SC2_IN_R	IN	LV	SCART 2 input, right
34	49	39	53	41	SC2_IN_L	IN	LV	SCART 2 input, left
35	48	-	52	40	ASG2		AHVSS	Analog Shield Ground 2

36	47	38	51	39	SC3_IN_R	IN	LV	SCART 3 input, right
37	46	37	50	38	SC3_IN_L	IN	LV	SCART 3 input, left
38	45	-	49	37	ASG4		AHVSS	Analog Shield Ground 4
39	44	-	48	36	SC4_IN_R	IN	LV	SCART 4 input, right
40	43	-	47	35	SC4_IN_L	IN	LV	SCART 4 input, left
41	-	-	46	-	NC		LV or AHVSS	Not connected
42	42	36	45	34	AGNDC		OBL	Analog reference voltage
43	41	35	44	33	AHVSS		OBL	Analog ground
-	-	-	43	-	AHVSS		OBL	Analog ground
-	-	-	42	-	NC		LV	Not connected
-	-	-	41	-	NC		LV	Not connected
44	40	34	40	32	CAPL_M		OBL	Volume capacitor MAIN
45	39	33	39	31	AHVSUP		OBL	Analog power supply 8V
46	38	32	38	30	CAPL_A		OBL	Volume capacitor AUX
47	37	31	37	29	SC1_OUT_L	OUT	LV	SCART output 1, left
48	36	30	36	28	SC1_OUT_R	OUT	LV	SCART output 1, right
49	35	29	35	27	VREF1		OBL	Reference ground 1
50	34	28	34	26	SC2_OUT_L	OUT	LV	SCART output 2, left
51	33	27	33	25	SC2_OUT_R	OUT	LV	SCART output 2, right
52	-	-	32	-	NC		LV	Not connected
53	32	-	31	24	NC		LV	Not connected
54	31	26	30	23	DACM_SUB	OUT	LV	Subwoofer output
55	30	-	29	22	NC		LV	Not connected
56	29	25	28	21	DACM_L	OUT	LV	Loudspeaker out, left
57	28	24	27	20	DACM_R	OUT	LV	Loudspeaker out, right
58	27	23	26	19	VREF2		OBL	Reference ground 2
59	26	22	25	18	DACA_L	OUT	LV	Headphone out, left
60	25	21	24	17	DACA_R	OUT	LV	Headphone out, right
-	-	-	23	-	NC		LV	Not connected
-	-	-	22	-	NC		LV	Not connected
61	24	20	21	16	RESETQ	IN	OBL	Power-on-reset
62	23	-	20	15	NC		LV	Not connected
63	22	-	19	14	NC		LV	Not connected
64	21	19	18	13	NC		LV	Not connected
65	20	18	17	12	I2S_DA_IN2	IN	LV	I^2S2-data input
66	19	17	16	11	DVSS		OBL	Digital ground
-	-	-	15	-	DVSS		OBL	Digital ground
-	-	-	14	-	DVSS		OBL	Digital ground
67	18	16	13	10	DVSUP		OBL	Digital power supply 5V
-	-	-	12	-	DVSUP		OBL	Digital power supply 5V
-	-	-	11	-	DVSUP		OBL	Digital power supply 5V
68	17	15	10	9	ADR_CL	OUT	LV	ADR clock

12. SERVICE MENU SETTINGS

All system, geometry and white balance alignments are performed in production service mode. Before starting the production mode alignments, make sure that all manual adjustments are done correctly. To start production mode alignments enter the maİn menu by pressing "**M**" button and then press the digits 4, 7, 2 and 5 buttons respectively. The following menu appears on the screen.

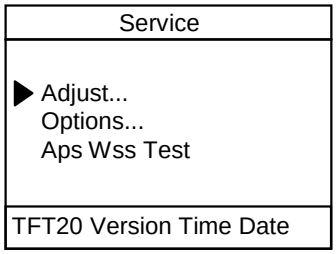

After entering the Service menu, you can access its items by pressing "▲/▼" buttons. In order to enter selected menu, use "◄/►" buttons. To exit the service menu press "**M"** button.
Entire service menu parameters of TFT TV are listed below.

12.1. ADJUST MENU SETTINGS

In order to enter Adjust menu, move the cursor to **Adjust…** parameter by pressing "▲/▼" buttons in Service Menu and press "◄/►" button. The following menu appears on the screen.

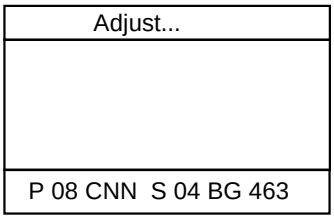

There is no items for adjustment in ADJUST menu for now.

12.2. OPTIONS MENU SETTINGS

In order to enter Options menu, move the cursor to **Options…** parameter by pressing "▲/▼" buttons in Service Menu and press "◄/►" button. The following menu appears on the screen.

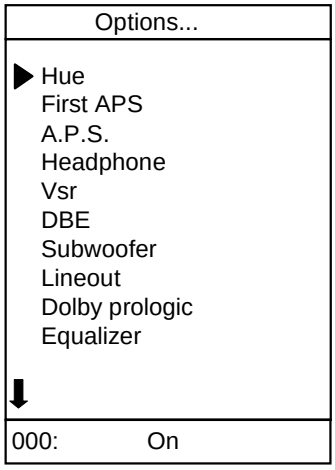

There are 50 items in the OPTIONS menu, but 10 of them are seen when you first enter the menu. Using "▲/▼" buttons remaining items can be seen.

Hue **On/Off**
Set **ON**

First APS **On/Off**
If ON, TV starts with APS menu at Start-up. Set **OFF**

A.P.S **On/Off**
enable/disable Automatic Programming System. Set **ON**

Headphone **On/Off**
enable/disable the usage of the HP and HP related items in sound menu. Set **ON**

Vsr **On/Off**
enable/disable Vsr. Set **OFF**

DBE **On/Off**
enable/disable DBE. Set **OFF**

Subwoofer **On/Off**
enable/disable Subwoofer. Set **OFF**

Lineout **On/Off**
enable/disable Lineout. Set **ON**

Dolby prologic **On/Off**
enable/disable dolby prologic system. Set **OFF**

Equalizer **On/Off**
enable/disable equalizer system. Set **ON**

BG **On/Off**
enable/disable BG Standard. Set **ON**

DK **On/Off**
enable/disable DK Standard. Set **OFF**

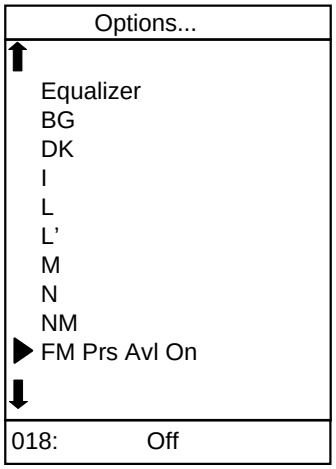

I **On/Off**
enable/disable I Standard. Set **OFF**

L **On/Off**
enable/disable L Standard. Set **OFF**

L' **On/Off**
enable/disable L' Standard. Set **OFF**

M **On/Off**
enable/disable M Standard. Set **OFF**

N **On/Off**
enable/disable N Standard. Set **OFF**

NM **On/Off**
enable/disable NM Standard. Set **OFF**

FM Prs Avl On
Adjusts the FM Prescaler value, when Automatic Volume Levelling is On

Min. Value:	0000	00000
Max. Value:	00FF	00255
Recommended Value:	000F	00015: for 16 ohm

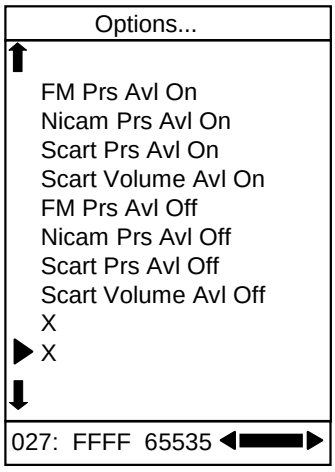

Nicam Prs Avl On
Adjusts the Nicam Prescaler value, when Automatic Volume Levelling is On

Min. Value:	0000	00000
Max. Value:	00FF	00255
Recommended Value:	0022	00035: for 16 ohm

Scart Prs Avl On
Adjusts the Scart Prescaler value, when Automatic Volume Levelling is On

Min. Value:	0000	00000
Max. Value:	00FF	00255
Recommended Value:	000F	00015: for 16 ohm

Scart Volume Avl On
Adjusts the Scart Volume value, when Automatic Volume Levelling is On

Min. Value:	0000	00000
Max. Value:	00FF	00255
Recommended Value:	0035	00051: for 16 ohm

FM Prs Avl Off
Adjusts the FM Prescaler value, when Automatic Volume Levelling is Off

Min. Value:	0000	00000
Max. Value:	00FF	00255
Recommended Value:	0008	00012: for 16 ohm

Nicam Prs Avl Off
Adjusts the Nicam Prescaler value, when Automatic Volume Levelling is Off

Min. Value:	0000	00000
Max. Value:	00FF	00255
Recommended Value:	0013	00028: for 16 ohm

Scart Prs Avl Off
Adjusts the Scart Prescaler value, when Automatic Volume Levelling is Off

Min. Value:	0000	00000
Max. Value:	00FF	00255
Recommended Value:	0008	00012: for 16 ohm

Scart Volume Avl Off
Adjusts the Scart Volume value, when Automatic Volume Levelling is Off

Min. Value:	0000	00000
Max. Value:	00FF	00255
Recommended Value:	0035	00051: for 16 ohm

X
Not used

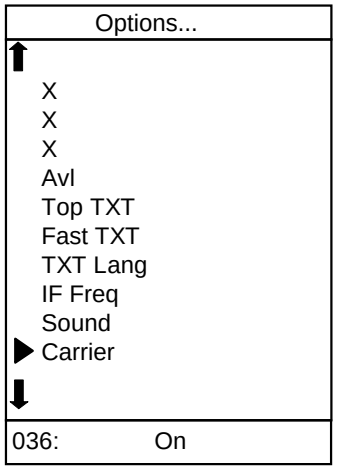

Avl **On/Off**
enable/disable Automatic Volume Levelling System. Set **ON**

Top TXT **On/Off**
enable/disable TopText. Set **OFF**

Fast TXT **On/Off**
enable/disable FastText. Set **ON**

TXT Lang
Switches between Teletext Language Groups

Min. Value:	0000	00000
Max. Value:	0004	00004
Recommended Value:	0000	00000

IF Freq
Adjusts the IF Frequency

Min. Value:	0000	00000
Max. Value:	00FF	00255
Recommended Value:	0000	00000

Sound **On/Off**
enable/disable Sound. Set **ON**

Carrier **On/Off**
enable/disable Carrier. Set **ON**

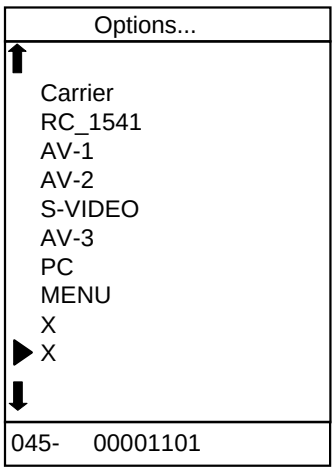

RC_1541 **On/Off**
Enables/disables Remote control usage for Service menu. Set **ON**.

AV-1 **On/Off**
enable/disable AV-1. Set **ON**

AV-2 **On/Off**
enable/disable AV-2. Set **ON**

S-VIDEO **On/Off**
enable/disable S-VIDEO. Set **ON**
AV-3 **On/Off**
enable/disable AV-3. Set **ON**

PC **On/Off**
enable/disable PC. Set **ON**

MENU **On/Off**
enable/disable semi-transparent MENU. Set **OFF.**

X
Not used.

AGC
Adjusts the Automatic Gain Control value.

Min. Value:	0000	00000
Max. Value:	001F	00031
Recommended Value:	000A	00010

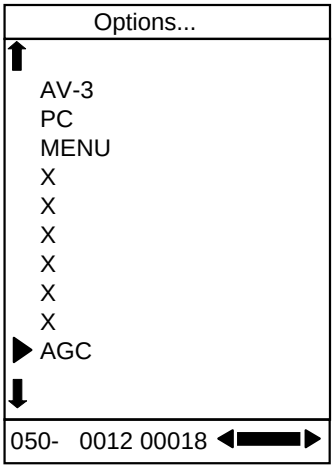

12.3. APS WSS TEST MENU

In order to enter Aps Wss Test menu, move the cursor to **Aps Wss Test** parameter by pressing "▲/▼" buttons in Service Menu and press "◄/►" button. The following menu appears on the screen.

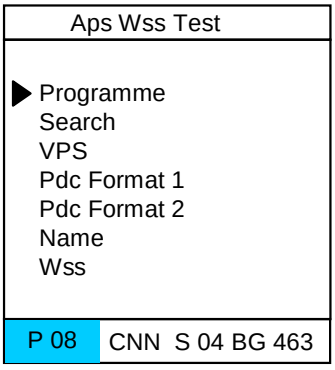

There are 7 items in the Aps Wss Test menu.

Programme
Search
VPS
Pdc Format 1
Pdc Format 2
Name
Wss

13. BLOCK DIAGRAM

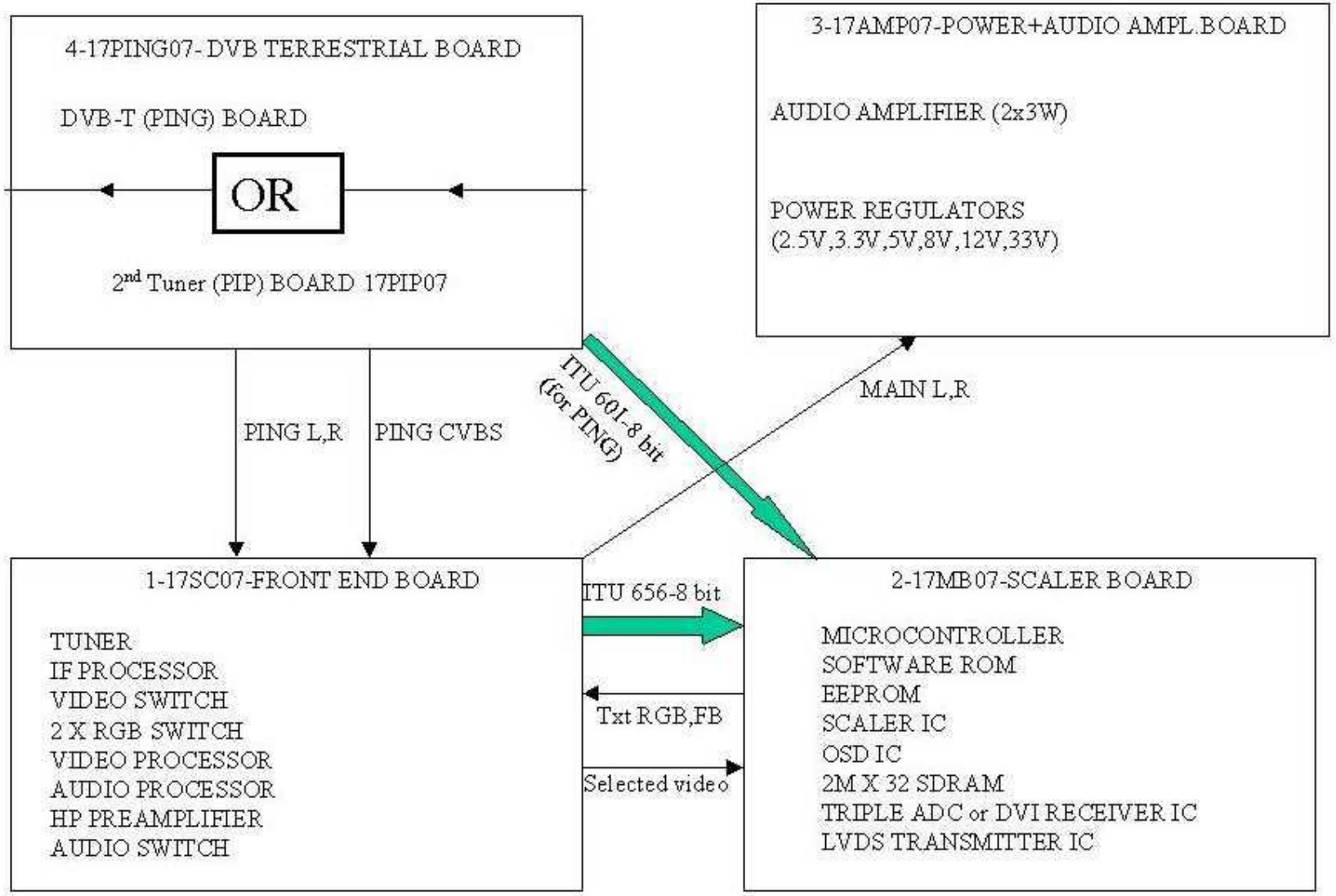

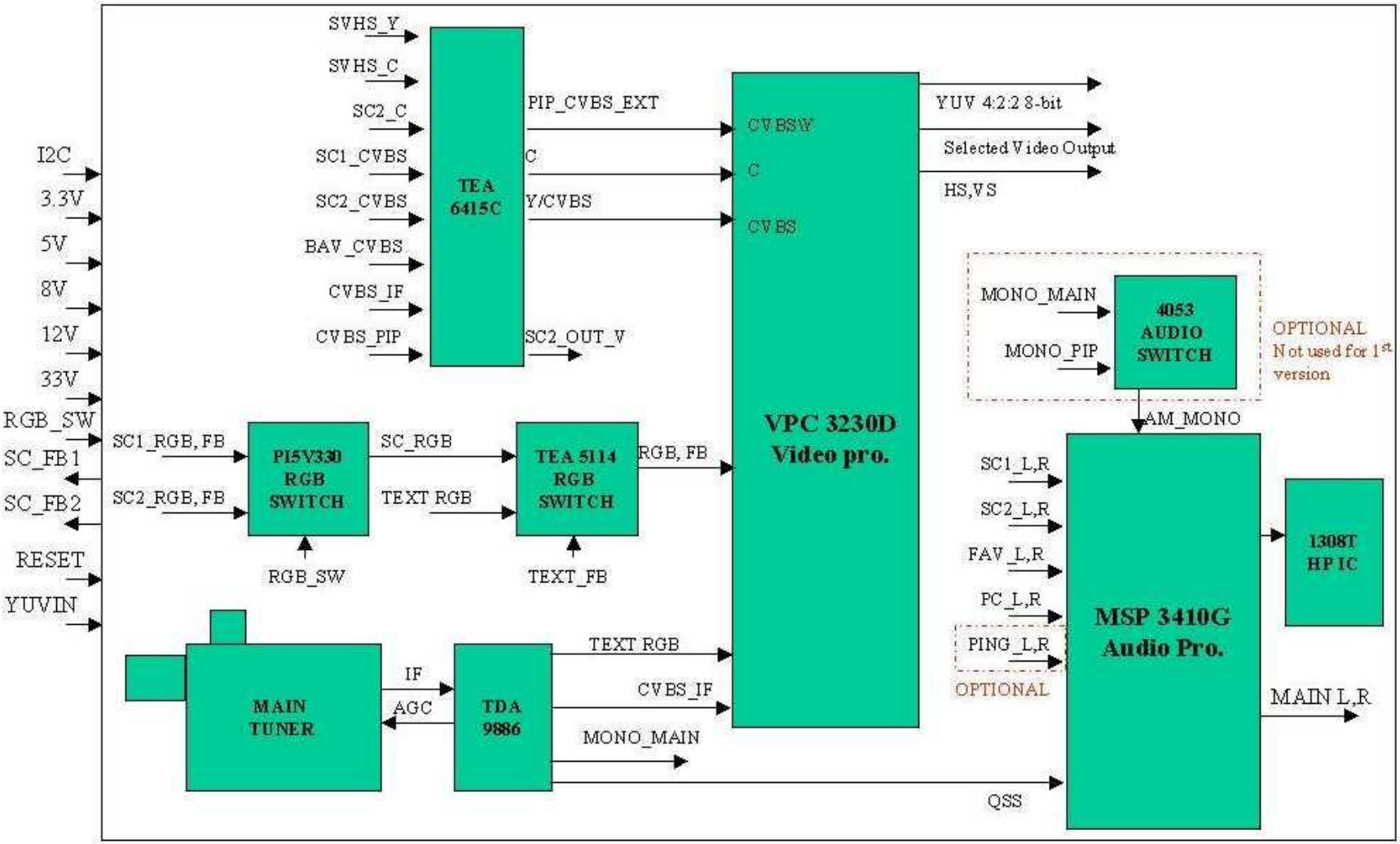

FRONT END BOARD

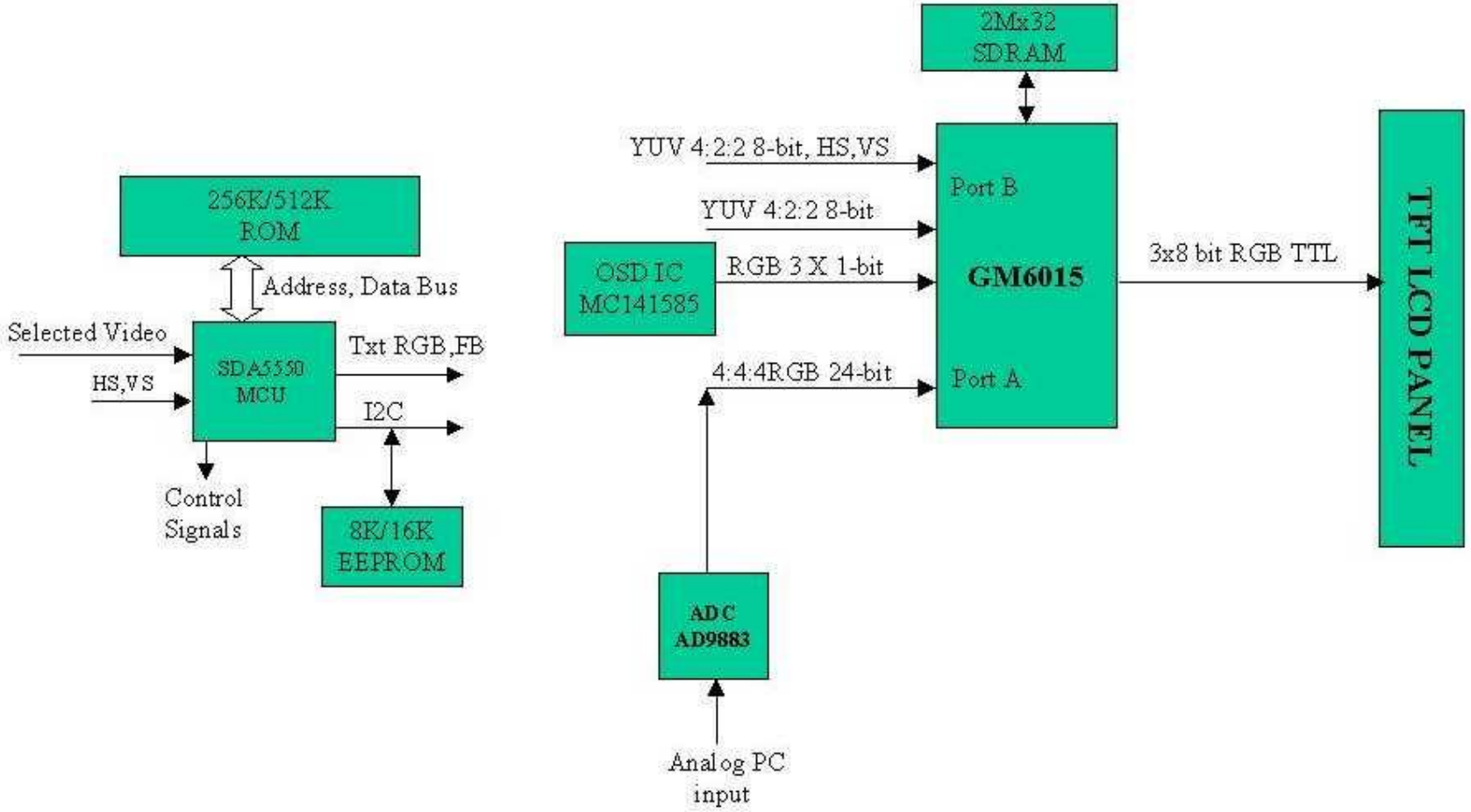

SCALER BOARD

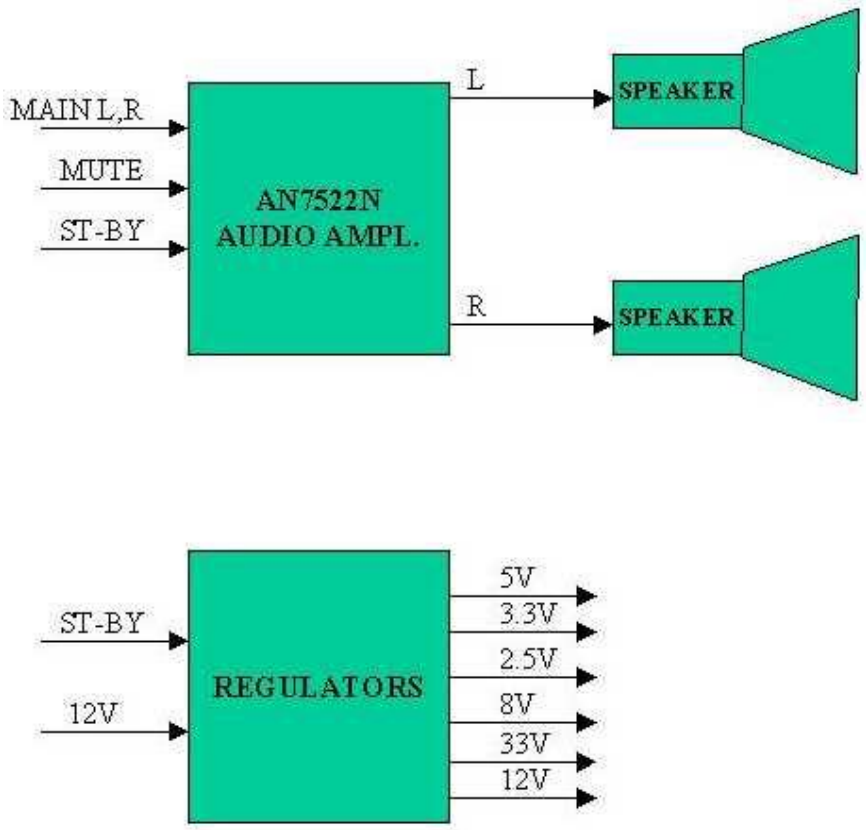

POWER+AUDIO AMP. BOARD

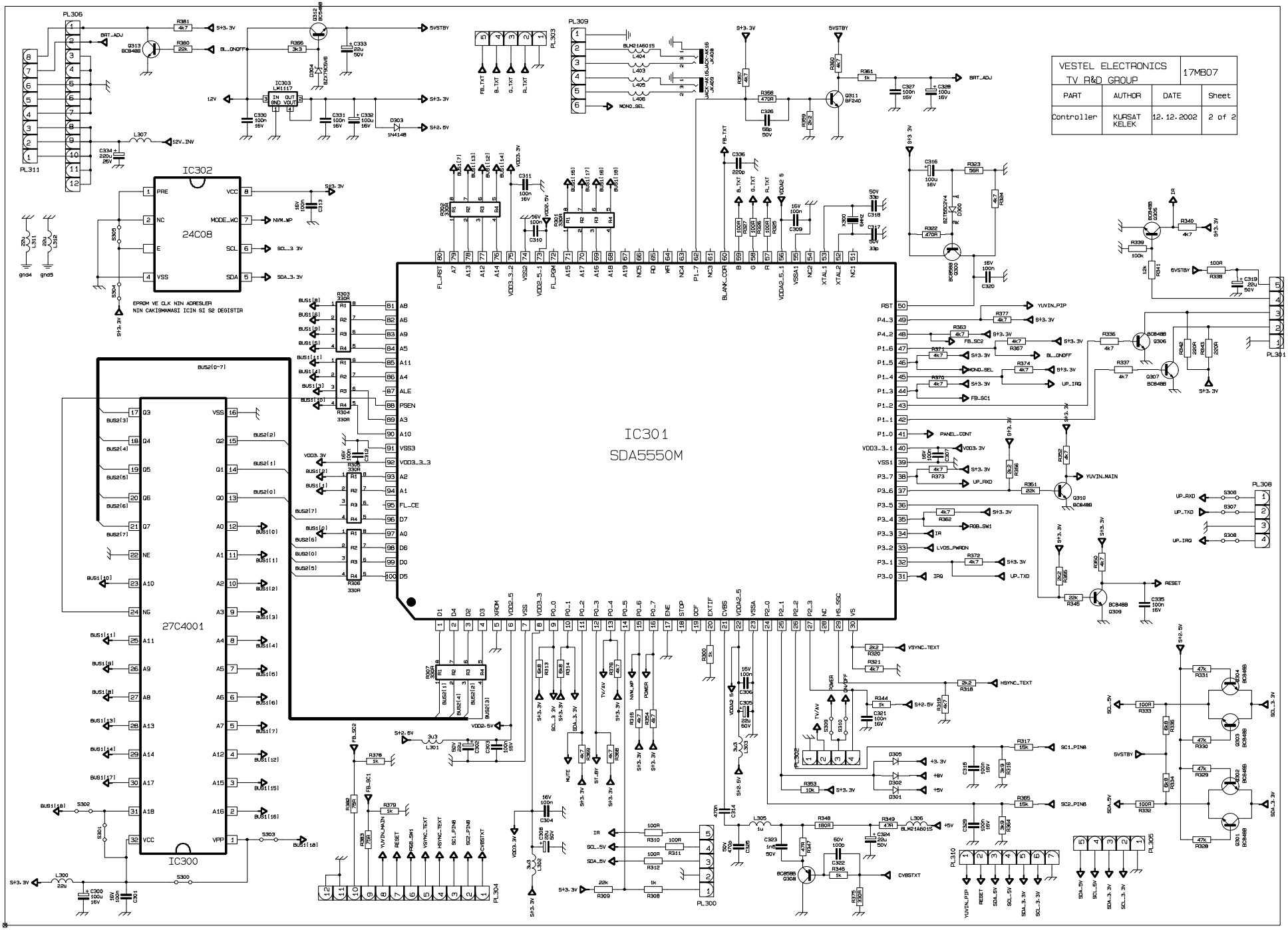

VESTEL ELECTRONICS TV R&D GROUP			17MB07
PART	AUTHOR	DATE	Sheet
Controller	KURSAT KELEK	12.12.2002	2 of 2

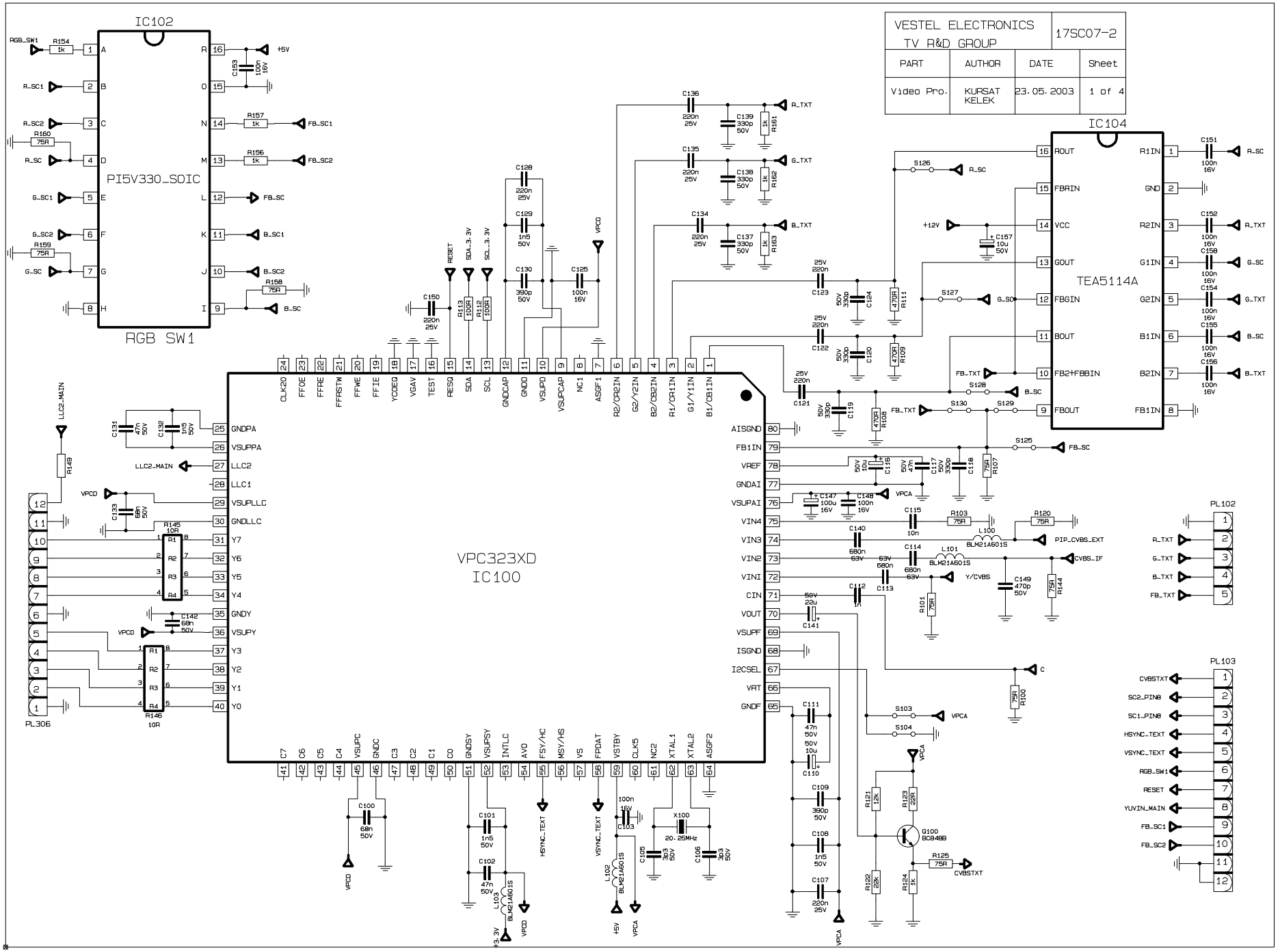
VESTEL ELECTRONICS
TV R&D GROUP
17SC07-2
PART
AUTHOR
DATE
Sheet
Video Pro.
KURSAT KELEK
23.05.2003
1 of 4
IC102
PI5V330_SOIC
RGB SW1
IC104
TEA5114A
VPC323XD
IC100
PL306
PL102
PL103

VESTEL ELECTRONICS TV R&D GROUP			17SC07-2
PART	AUTHOR	DATE	Sheet
Video SW.	KURSAT KELEK	23.05.2003	3 of 4

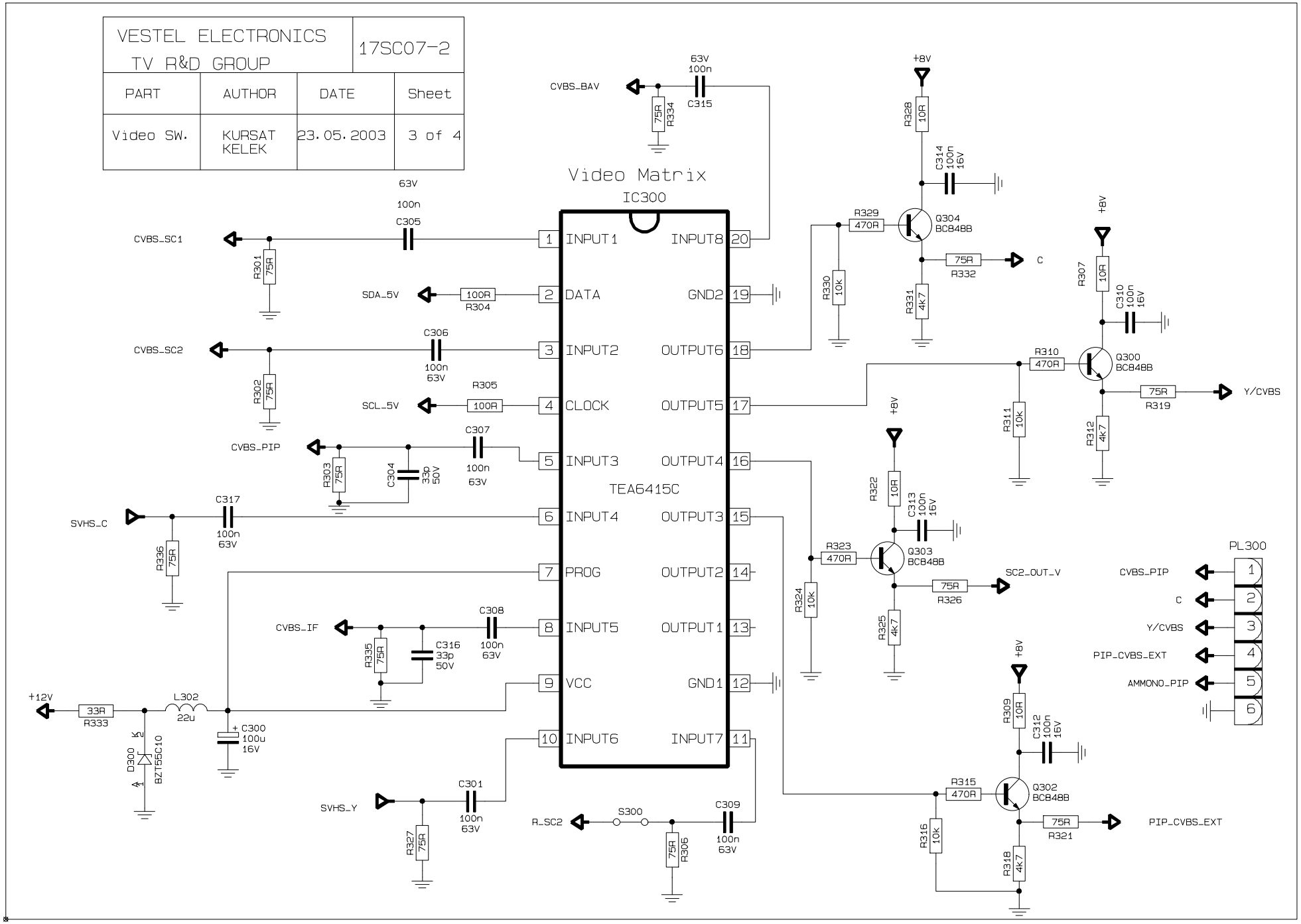

A B C

1

PL1
4
3
2
1
MENU
P+
P-
VOL+
VOL-
TSW-VERTICAL
SW15
SW5
SW14
SW4
SW13
SW3
SW12
SW2
SW11
SW1
SW16
SW6
SW7
SW17
R5
270R
R4
470R
R3
680R
R2
1k5
R1
3k9
POWER
TV/AV

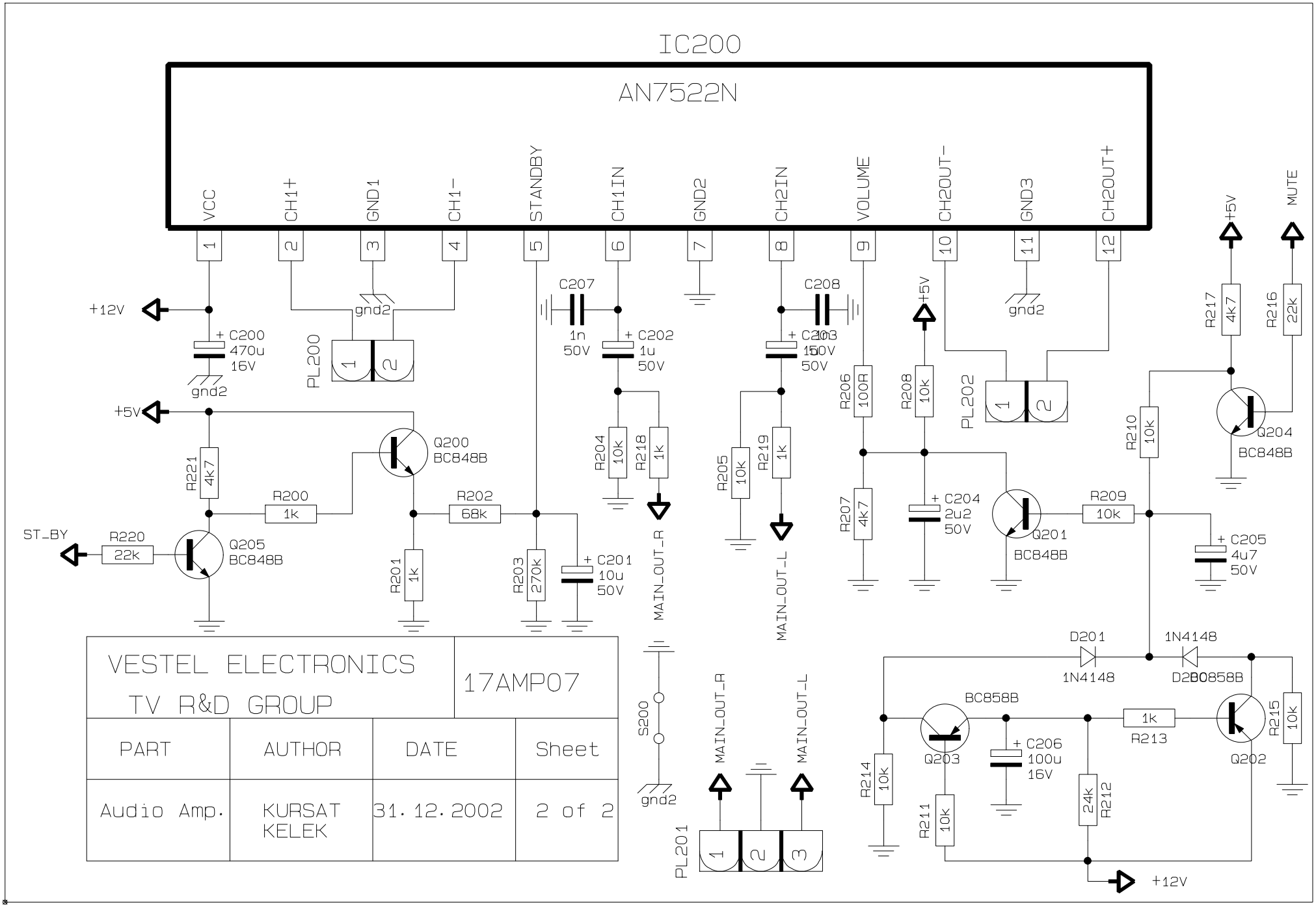
IC200
AN7522N
VCC
CH1+
GND1
CH1-
STANDBY
CH1IN
GND2
CH2IN
VOLUME
CH2OUT-
GND3
CH2OUT+
+12V
C200 470u 16V
gnd2
PL200
+5V
R221 4k7
Q200 BC848B
R200 1k
R202 68k
ST_BY
R220 22k
Q205 BC848B
R201 1k
R203 270k
C201 10u 50V
C207 1n 50V
C202 1u 50V
R204 10k
R218 1k
MAIN_OUT_R
C208 1n 50V
C203 1n 50V
R205 10k
R219 1k
MAIN_OUT_L
R206 100R
R208 10k
R207 4k7
C204 2u2 50V
Q201 BC848B
R209 10k
PL202
R210 10k
C205 4u7 50V
R217 4k7
R216 22k
MUTE
Q204 BC848B
D201 1N4148
1N4148
D2BC858B
BC858B
Q203
C206 100u 16V
R213 1k
Q202
R215 10k
R214 10k
R211 10k
R212 24k
S200
PL201
VESTEL ELECTRONICS
TV R&D GROUP
17AMP07
PART
AUTHOR
DATE
Sheet
Audio Amp.
KURSAT KELEK
31.12.2002
2 of 2

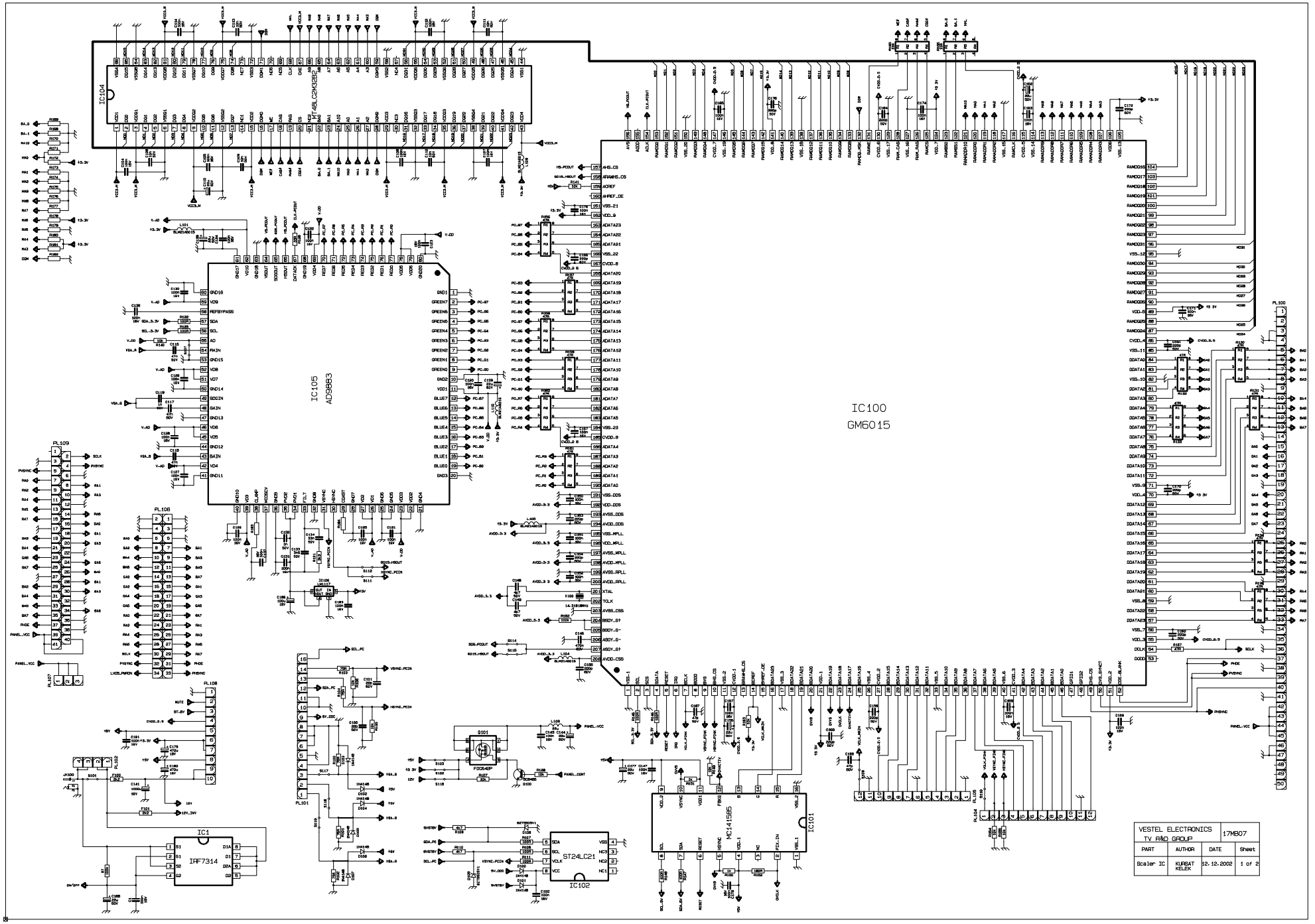
IC104
MT48LC2M32B2
IC105
AD9883
IC100
GM6015
IC1
IRF7314
IC101
MC141585
IC102
ST24LC21
Q101
FDD5-4BP
PL100
PL101
PL102
PL104
PL105
PL106
PL107
PL108
PL109
VESTEL ELECTRONICS
TV R&D GROUP
17MB07
PART
AUTHOR
DATE
Sheet
Scaler IC
KURSAT KELEK
12.12.2002
1 of 2

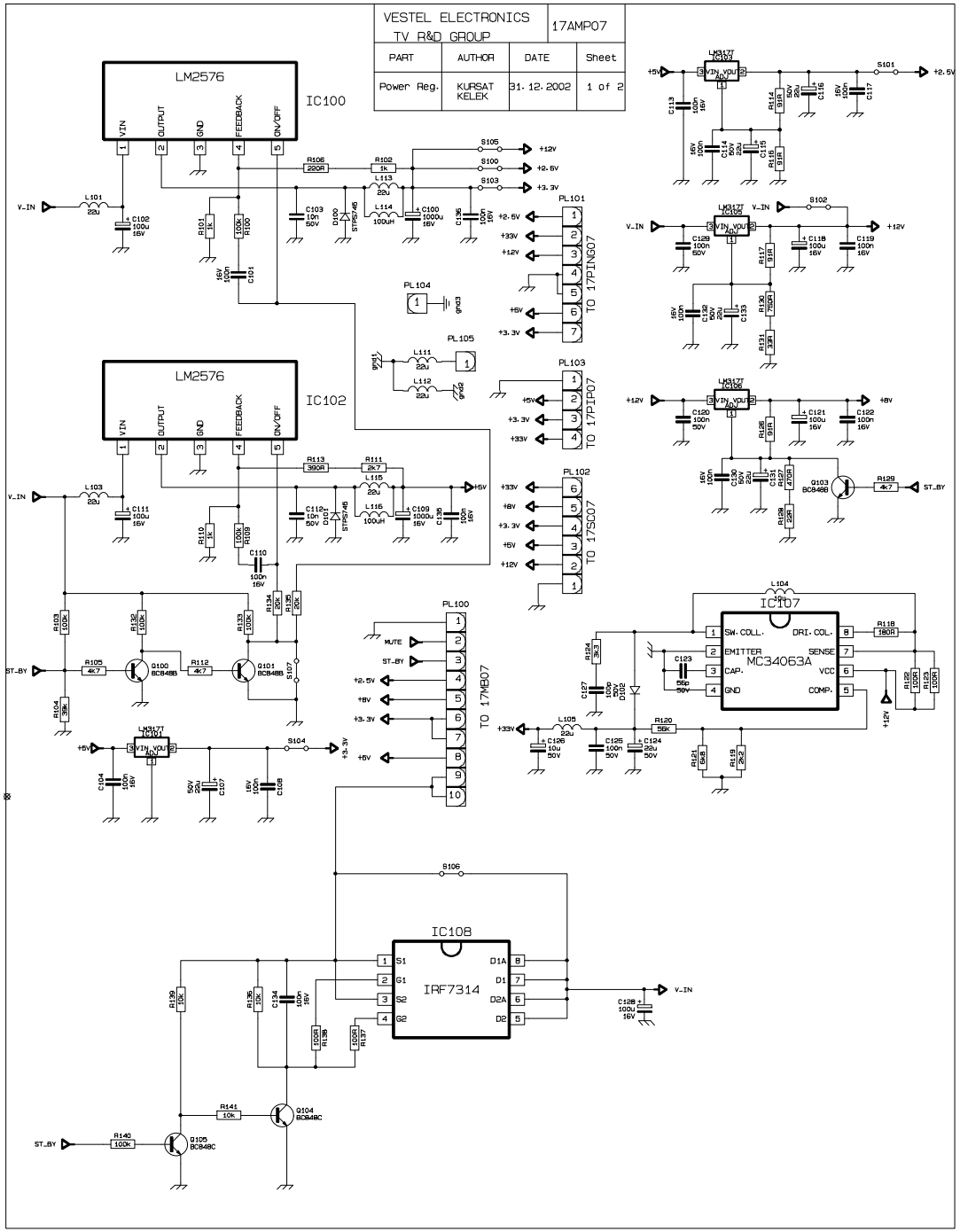
VESTEL ELECTRONICS
TV R&D GROUP
17AMP07
PART
AUTHOR
DATE
Sheet
Power Reg.
KURSAT KELEK
31.12.2002
1 of 2
LM2576
IC100
LM2576
IC102
IC107
MC34063A
IC108
IRF7314
TO 17PING07
TO 17PIP07
TO 17SC07
TO 17MB07
V_IN
+12V
+8V
+5V
+3.3V
+2.5V
ST_BY
MUTE

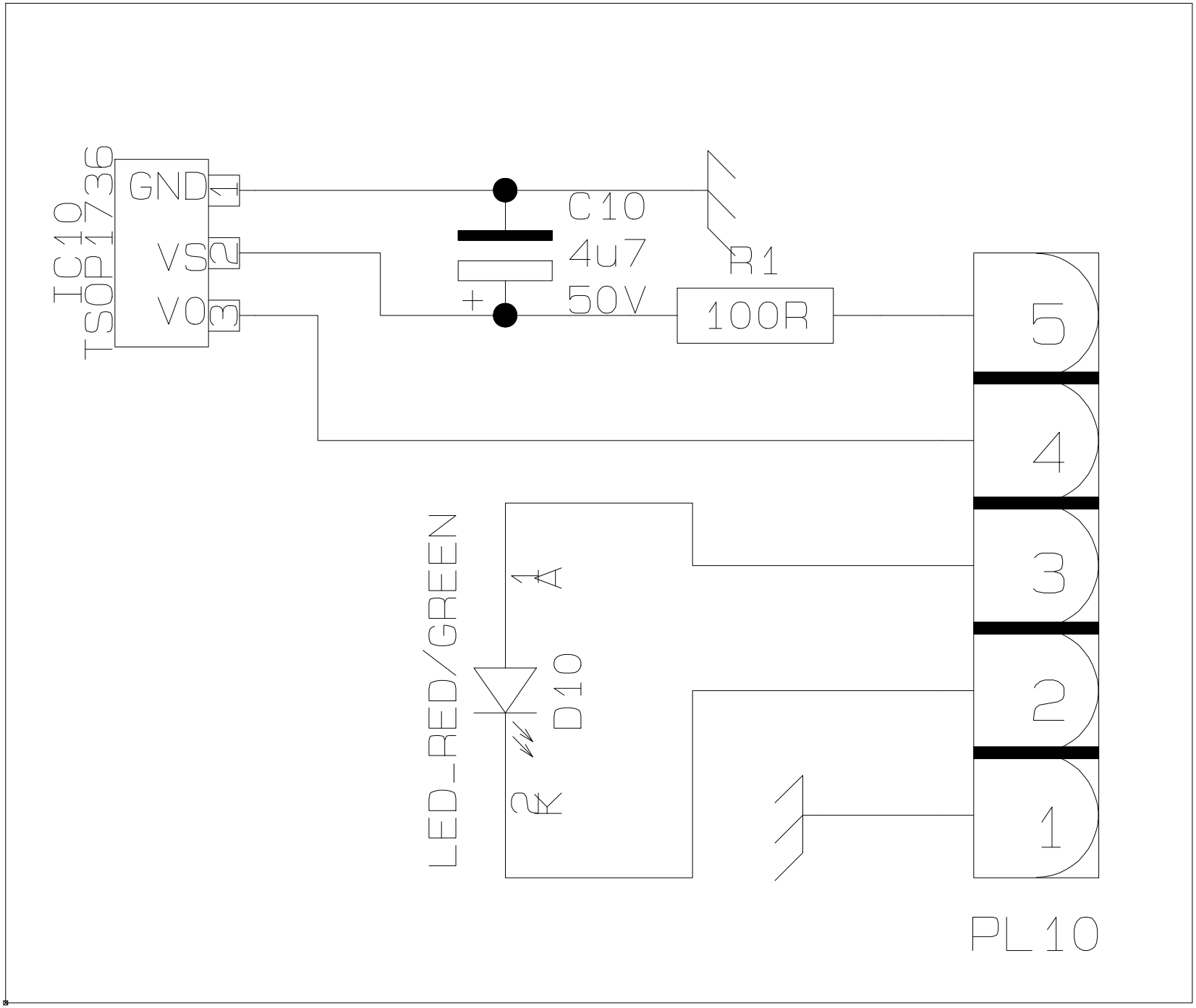
IC10
TSOP1736
GND
VS
VO
1
2
3
C10
4u7
50V
R1
100R
LED_RED/GREEN
A
K
D10
5
4
3
2
1
PL10

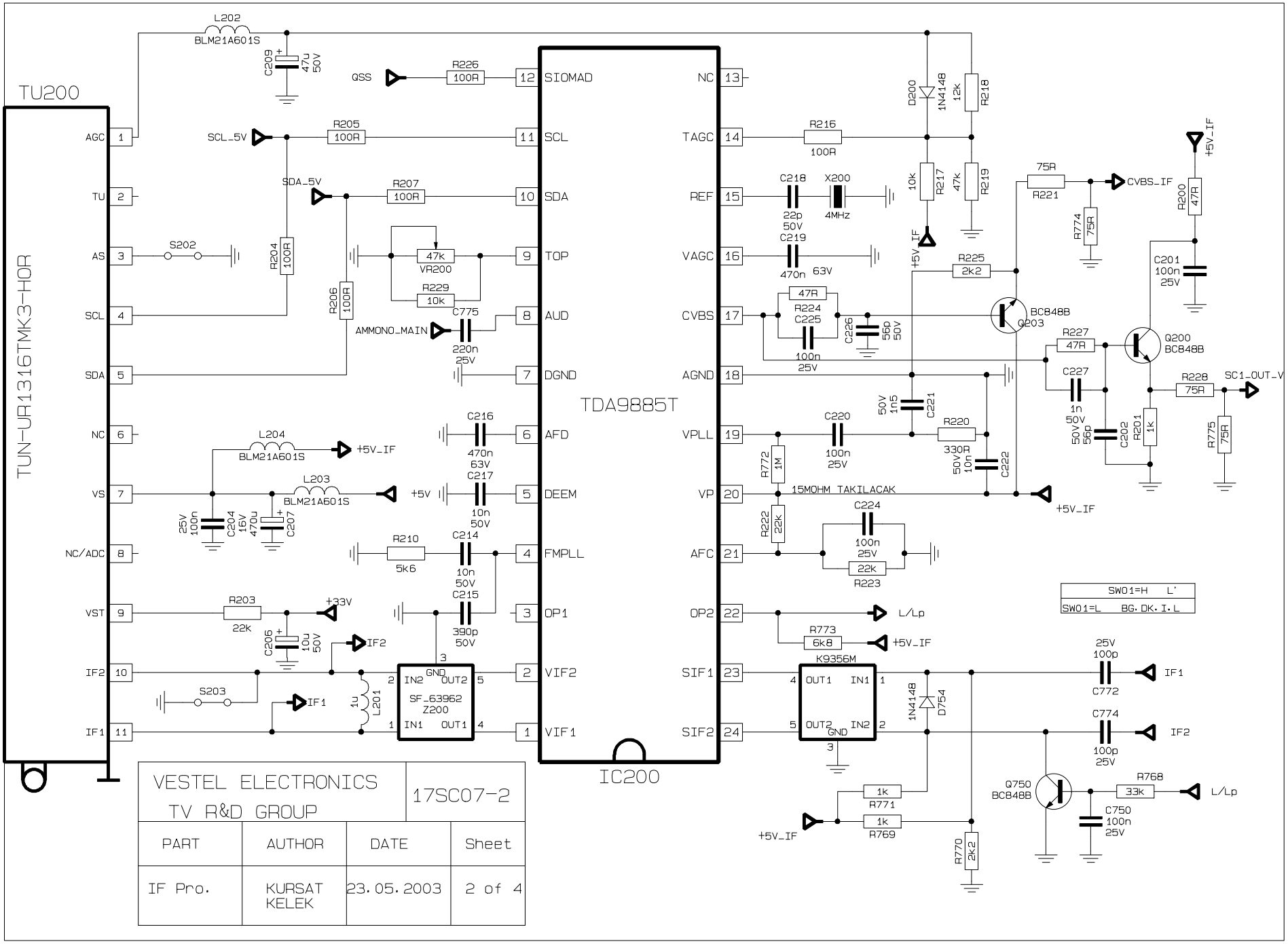

VESTEL ELECTRONICS TV R&D GROUP			17SC07-2
PART	AUTHOR	DATE	Sheet
IF Pro.	KURSAT KELEK	23.05.2003	2 of 4